8K AI Core Board

- iCore-3588Q(Commercial)
- iCore-3588JQ(Industrial)
- iCore-3588MQ(Automotive)

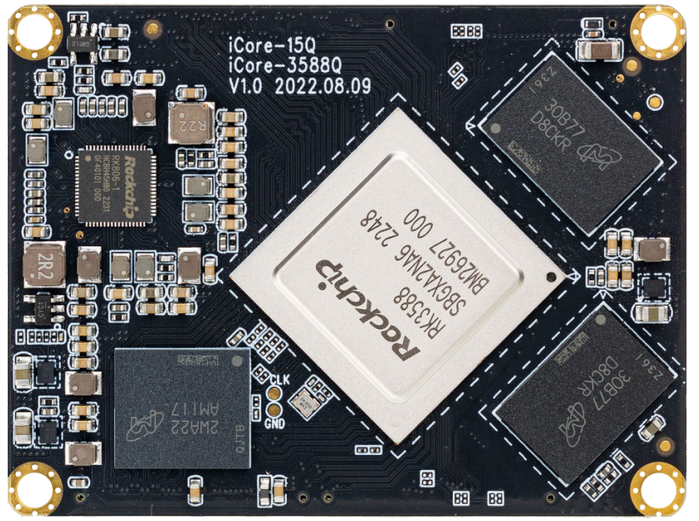

V1.0 2024-3-14

T-CHIP INTELLIGENCE TECHNOLOGY

Product features

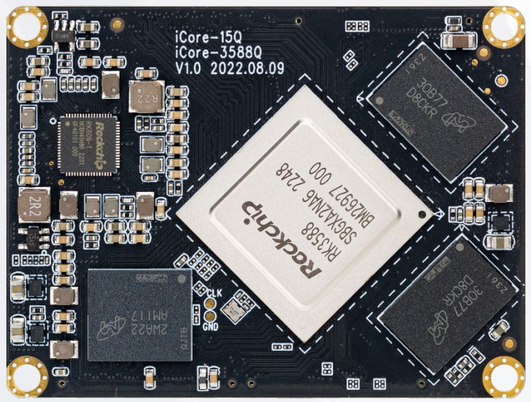

8-Core 64bit processor

8-Core 64bit processor RK3588
8nm lithography process
up to 2.4GHz

Super-large 32GB RAM

Up to 32GB RAM
Support LPDDR4/LPDDR4x/LPDDR5

8K H.265 / 6TOPS NPU

OpenGL ES3.2/2.0, Vulkan1.1
8K@60fps H.265/VP9 Decoding
8K@30fps H.265/H.264 Encoding
6TOPS NPU computing power

Network communication

Integrated PCIe3.0/GMAC/SDIO3.0/
USB3.0, can be extended to multi-
channel Gigabit Ethernet, WiFi6/
Bluetooth and 5G/4G LTE

Operating systems

Android 12.0, Ubuntu Desktop and
Server, Debian11, Buildroot,
RTLinux

A variety of interfaces

PCIE3.0, SATA3.0, I2S, I2C, CAN, UART,
SDIO3.0, MIPI-CSI, MIPI-DSI, SPDIF,
USB3.1, USB2.0, SPI, GPIO

Specifications

		iCore-3588Q (Commercial)	iCore-3588JQ(Industrial)	iCore-3588MQ(Automotive)
Basic Specifications	CPU	RK3588 Octa-core 64-bit (4*Cortex-A76+4*Cortex-A55) Up to 2.4 GHz	RK3588J Octa-core 64-bit (4*Cortex-A76+4*Cortex-A55) Up to 1.6 GHz	RK3588M Octa-core 64-bit (4*Cortex-A76+4*Cortex-A55) Up to 2.2 GHz
	GPU	ARM Mali-G610 MP4 quad-core GPU Support OpenGL ES3.2 / OpenCL 2.2 / Vulkan1.1, 450 GFLOPS		
	NPU	Up to 6TOPs (INT8) Support INT4/INT8/INT16 mixed operations Support framework switching of TensorFlow / MXNet / PyTorch / Caffe		
	ISP	48MP ISP with HDR & 3DNR		
	VPU	Hardware decoding: 8K@60fps H.265/VP9/AVS2, 8K@30fps H.264 AVC/MVC, 4K@60fps AV1, 1080P@60fps MPEG-2/-1/VC-1/VP8 Hardware encoding: 8K@30fps H.265 / H.264		
	RAM	LPDDR4/LPDDR4x (4GB/8GB/16GB, up to 32GB)	LPDDR4/LPDDR4x(industrial) (4GB/8GB/16GB, up to 32GB)	LPDDR4/LPDDR4x (4GB/8GB/16GB, up to 32GB)
	Storage	eMMC (32GB/64GB/128GB/256GB optional)		
	Power	4V (voltage tolerance ± 5%)		
	OS	Android and Linux OS		
	Interface	BTB (3 * BTB Socket (80Pin) + 1 * BTB Socket (100Pin))		
	Size	66 mm * 50 mm		
	Power consumption	Min:≈0.032W(4.0V/8mA) Normal:≈0.84W(4.0V/210mA) Max:≈11.2W(4.0V/2.8A)	Min:≈0.032W(4.0V/8mA) Normal:≈0.84W(4.0V/210mA) Max:≈7.6W(4.0V/1.9A)	Min:≈0.032W(4.0V/8mA) Normal:≈0.92W(4.0V/230mA) Max:≈10W(4.0V/2.5A)
	Environment	Operating temperature: -20℃ ~ 60℃ Operating humidity: 10% ~ 90%RH (non-condensing)	Operating temperature: -40℃ ~ 85℃ Operating humidity: 10% ~ 90%RH (non-condensing)	Operating temperature: -40℃ ~ 85℃ Operating humidity: 10% ~ 90%RH (non-condensing)
Interface Specifications	Network	PCIe3.0/GMAC/SDIO3.0/USB3.1 (Gen1), capable of multi-channel Gigabit Ethernet, WiFi 6/Bluetooth, 5G/4G LTE expansion		
	Video Input	1*HDMI-IN (4K@60fps), supporting HDCP 2.3, 2*MIPI CSI (4 lanes) or 4*MIPI CSI (2 lanes) or 1*MIPI CSI (4 lanes) + 2*MIPI CSI (2 lanes) 2*MIPI DC (4-lane DPHY v2.0 or 3-lane CPHY V1.1), 1*DVP (up to 150MHz data input) *Support multi-channel 8K video output and 4K video input. Up to seven displays can be achieved.		
	Video Output	2*HDMI2.1 (8K@60fps or 4K@120fps, shared with eDP), 2*MIPI-DSI (4K@60fps), 2*DP1.4 (8K@30fps, shared with USB 3.0), 1*BT.1120 (1080P@60fps)		
	Audio Output	2* I2S(8 lanes), 2*I2S (2 lanes), 2*SPDIF,2*PDM (8 lanes, supporting multi-Mic array), 1* dual-channel digital audio codec (16-bit DAC), 1*VAD		
	USB	3*USB3.1 (Gen1), 2*USB 2.0 Host, 2*USB 2.0 OTG		
	PCIe	PCIe3.0 (2*2lanes, 1*4 lanes, 4*1 lane), 3*PCIE2.0 (1 lane)		
	SATA	3*SATA3.0		
	Watchdog	Independent watchdog		
	Other	9*I2C, 10*UART, 5*SPI, 4*ADC, 16*PWM, 1*SDMMC, GPIOs, 3*CAN (not supported by iCore-3588MQ)		

Core board Interface description

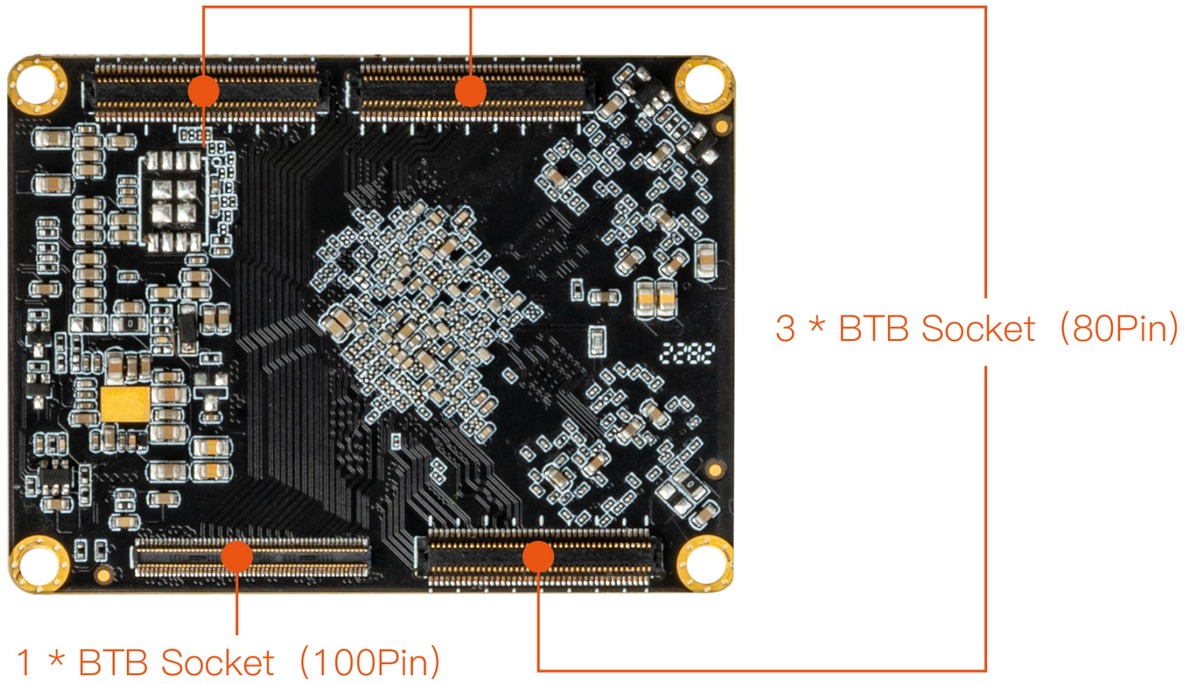

PCIe3.0	SATA3.0	UART	CAN	SPDIF
SDIO3.0	GPIO	MIPI–DSI	MIPI–CSI	USB3.1

(CAN not supported by iCore-3588MQ)

Core board Dimension

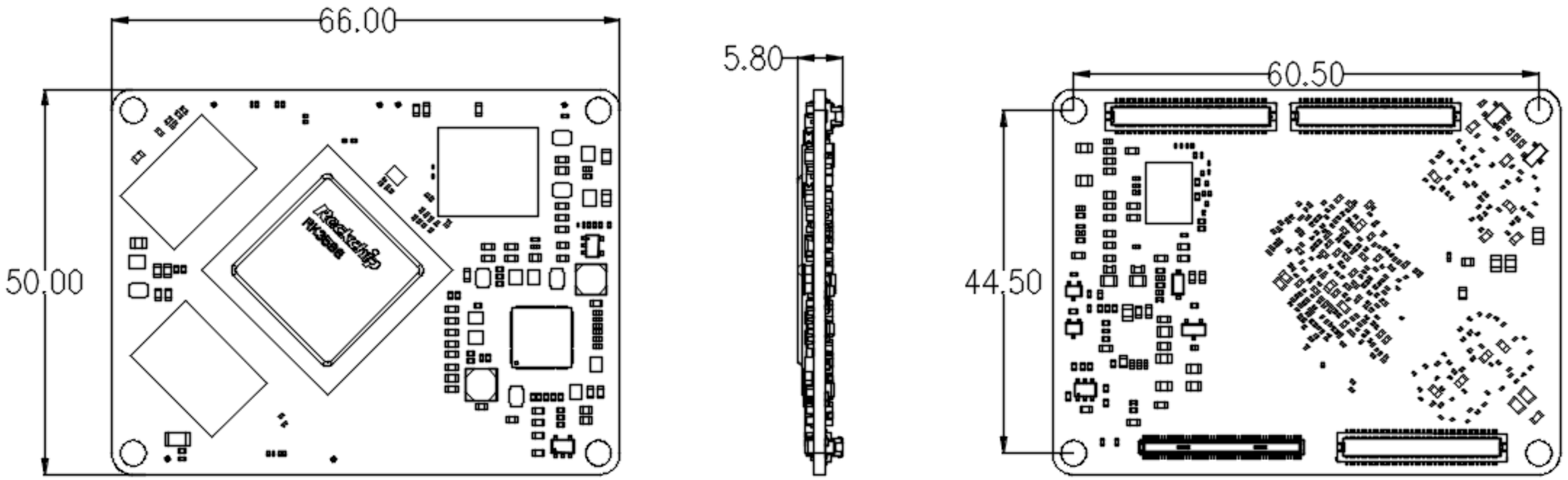

Mainboard Interface description

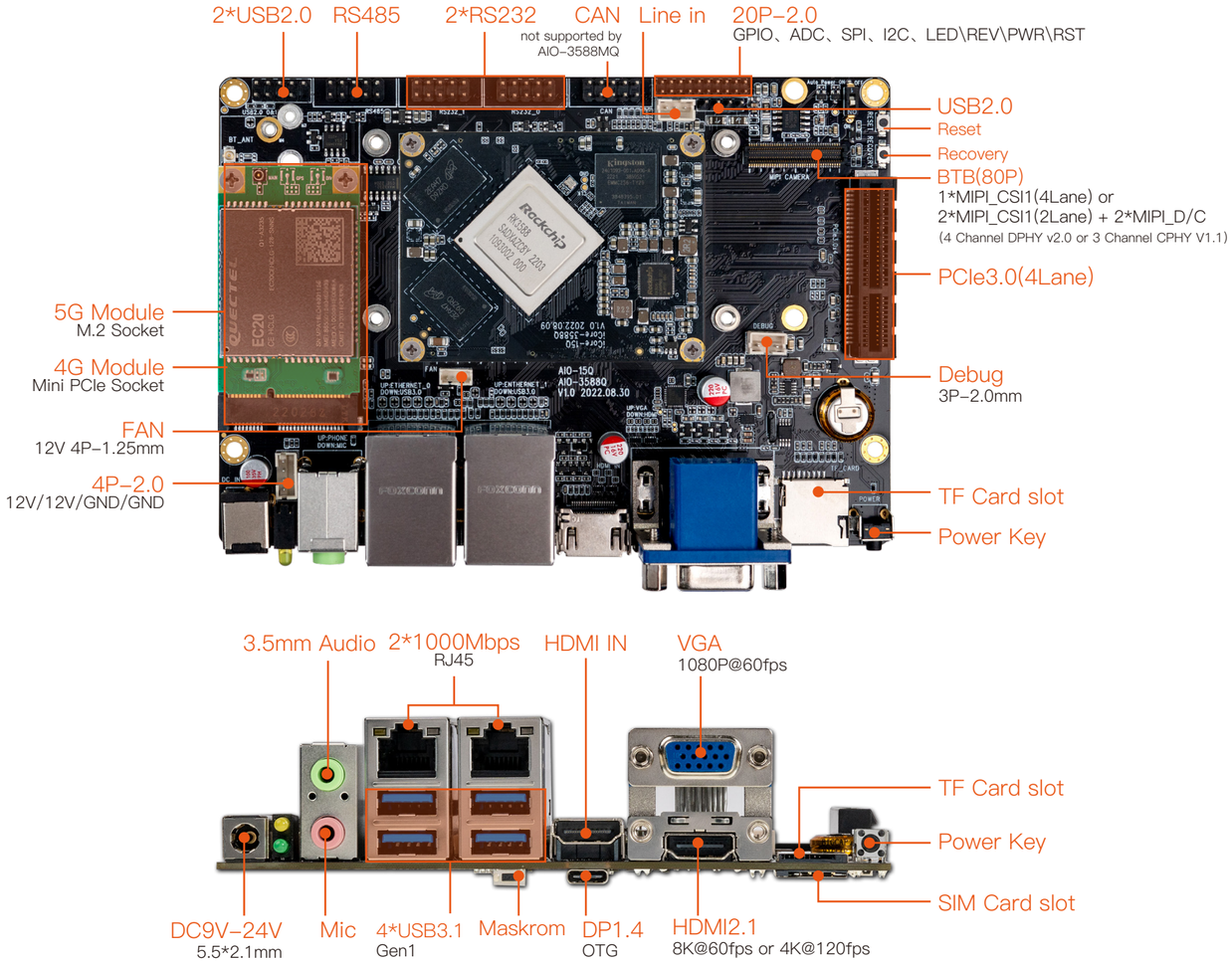

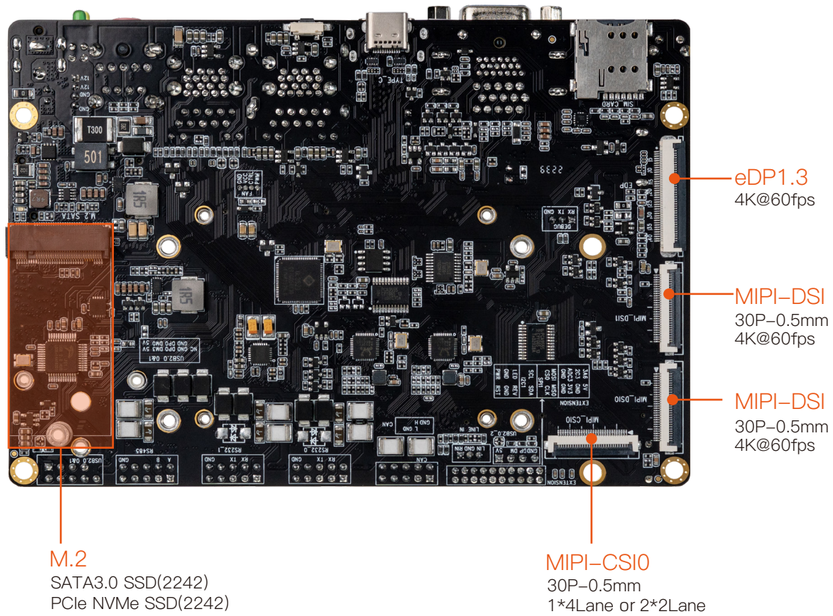

Mainboard Dimension

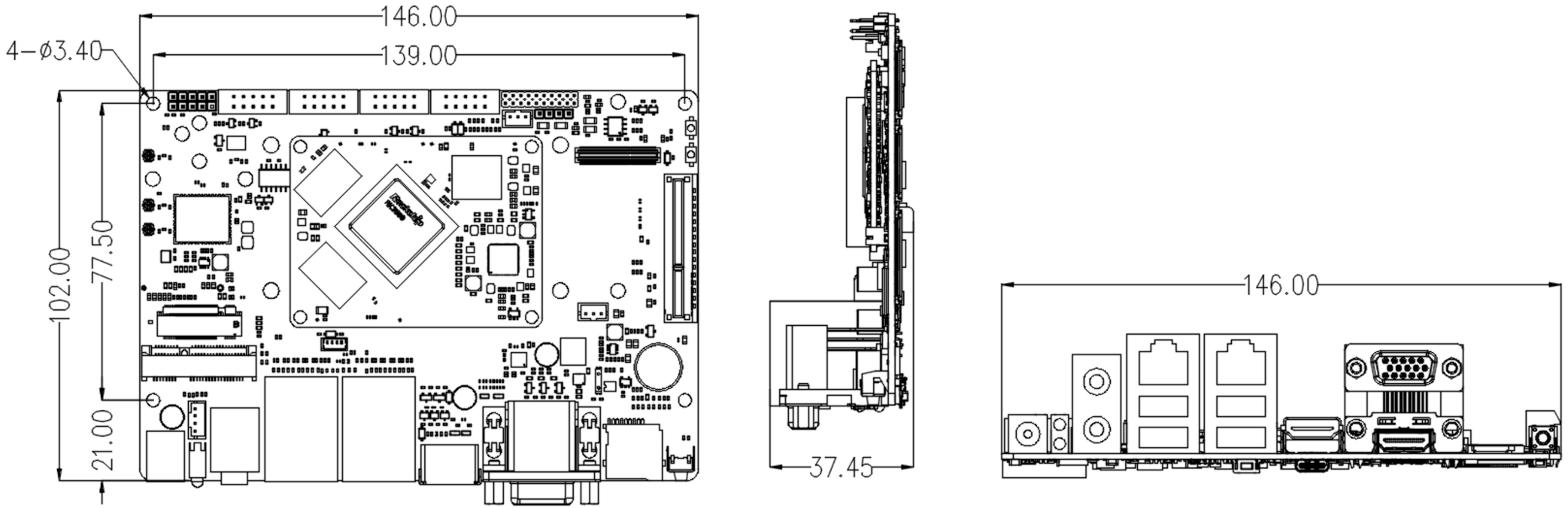

Interface definition

① : Pad types: I = input, O = output, I/O = input/output (bidirectional) , G= Ground ,
P = power supply , DOWN = Internal pull down , UP = Internal pull UP L = Lowe Level H = High level"
⑤ > CAN not supported by iCore-3588MQ

PIN	(J1) ICORE-3588Q pin definition	Pad type	IO Pull	Function for Mainboard (MB-Q-RK3588)	Defual function description	IO Power domain	RK3588 Pin Number
1	GND	G		GND	GND	GND	
3	GND	G				GND	
5	GND	G				GND	
7	GND	G				GND	
9	VCC4V0_SYS	P		VCC4V0_SYS	Core board Power Input:4.0V +/-5%	4.0V	
11	VCC4V0_SYS	P				4.0V	
13	VCC4V0_SYS	P				4.0V	
15	VCC4V0_SYS	P				4.0V	
17	VCC4V0_SYS	P				4.0V	
19	VCC4V0_SYS	P				4.0V	
21	VCCA_3V3_S0	P		VCCA_3V3_S0	3.3V Output (Max:300mA)	3.3V	
23	MIPI_CAMERA0_CLK_M0/SPDIF1_TX_M1/I2S1_SDO0_M0/PCIE30X1_0_BUTTON_RSTN/SATA2_ACT_LED_M0/I2C6_SCL_M3/UART8_RX_M0/SPI0_CS1_M1/GPIO4_B1_u	I/O	UP	I2S1_SDO_M0_BT	I2S1_SDO_M0_BT	3.3V	AL24
25	BT1120_D15/SPDIF1_TX_M2/PCIE20X1_2_PERSTN_M1/HDMI_TX0_CEC_M0/I2C8_SDA_M3/PWM6_M1/SPI3_CS1_M1/GPIO4_C1_d	I/O	DOWN	HDMITX0_CEC_M0	HDMITX0_CEC_M0	3.3V	AK24
27	BT1120_D14/PCIE20X1_2_WAKEN_M1/HDMI_TX0_SDA_M0/I2C8_SCL_M3/SPI3_CS0_M1/GPIO4_C0_u	I/O	UP	HDMITX0_SDA_M0	HDMITX0_SDA_M0	3.3V	AJ25
29	BT1120_D13/PCIE20X1_2_CLKREQN_M1/HDMI_TX0_SCL_M0/I2C5_SDA_M1/SPI3_CLK_M1/GPIO4_B7_u	I/O	UP	HDMITX0_SCL_M0	HDMITX0_SCL_M0	3.3V	AJ28
31	TYPEC1_USB20_OTG_ID	I		NC	NC	1.8V	AK8
33	TYPEC1_USB20_VBUSDET	I		NC	NC	3.3V	AL8
35	TYPEC0_USB20_OTG_ID	I		NC	NC	1.8V	AL14
37	TYPEC0_USB20_VBUSDET	I		TYPEC0_USB20_VBUSDET	TYPEC0_USB20_VBUS DET,Active H	3.3V	AM14
39	CIF_D14/PCIE30X2_CLKREQN_M2/HDMI_RX_SCL_M1/I2C7_SCL_M2/UART9_RTSN_M2/SPI0_MOSI_M3/GPIO3_D2_d	I/O	DOWN	HDMI_RX_SCL_M1	HDMI_RX_SCL_M1	VCCIO5	AG25
41	CIF_D15/PCIE30X2_WAKEN_M2/HDMI_RX_SDA_M1/I2C7_SDA_M2/UART9_CTSN_M2/PWM10_M2/SPI0_CLK_M3/GPIO3_D3_d	I/O	DOWN	HDMI_RX_SDA_M1	HDMI_RX_SDA_M1	VCCIO5	AG24
43	CIF_D13/PCIE20X1_2_PERSTN_M0/HDMI_RX_CEC_M1/UART4_TX_M1/PWM9_M2/SPI0_MISO_M3/GPIO3	I/O	DOWN	HDMI_RX_CEC	HDMI_RX_CEC	VCCIO5	AG23
45	GND	G		GND	GND	GND	
47	HDMI_RX_CLKN	I		HDMI_RX_CLKN	HDMI_RX_CLKN		AF5
49	HDMI_RX_CLKP	I		HDMI_RX_CLKP	HDMI_RX_CLKP		AF6
51	HDMI_RX_D0N	I		HDMI_RX_D0N	HDMI_RX_D0N		AG4
53	HDMI_RX_D0P	I		HDMI_RX_D0P	HDMI_RX_D0P		AG5
55	HDMI_RX_D1N	I		HDMI_RX_D1N	HDMI_RX_D1N		AH5
57	HDMI_RX_D1P	I		HDMI_RX_D1P	HDMI_RX_D1P		AH6
59	HDMI_RX_D2N	I		HDMI_RX_D2N	HDMI_RX_D2N		AJ4
61	HDMI_RX_D2P	I		HDMI_RX_D2P	HDMI_RX_D2P		AJ5

63	GND	G		GND	GND	GND	
65	USB20_HOST0_DP	I/O		USB20_HOST0_DP	USB20_HOST0_DP		AK8
67	USB20_HOST0_DM	I/O		USB20_HOST0_DM	USB20_HOST0_DM		AL6
69	USB20_HOST1_DP	I/O		USB20_HOST1_DP	USB20_HOST1_DP		AL7
71	USB20_HOST1_DM	I/O		USB20_HOST1_DM	USB20_HOST1_DM		AM7
73	TYPEC1_USB20_OTG_DP	I/O		TYPEC1_OTG_DP	TYPEC1_OTG_DP		AK9
75	TYPEC1_USB20_OTG_DM	I/O		TYPEC1_OTG_DM	TYPEC1_OTG_DM		AL9
77	TYPEC1_SBU1/DP1_AUXP	I/O		DP1_AUXP	DP1_AUXP	1.8V	AL10
79	TYPEC1_SBU2/DP1_AUXN	I/O		DP1_AUXN	DP1_AUXN	1.8V	AM10
PIN	**(J1) ICORE-3588Q pin definition**	**Pad type**	**IO Pull**	**Function for Mainboard (MB-Q-RK3588)**	**Defual function description**	**IO Power domain**	**RK3588 Pin Number**
2	GND	G		GND	GND	GND	
4	GND	G				GND	
6	GND	G				GND	
8	GND	G				GND	
10	VCC4V0_SYS	P		VCC4V0_SYS	Core board Power Input: 4.0V +/-5%	4.0V	
12	VCC4V0_SYS	P				4.0V	
14	VCC4V0_SYS	P				4.0V	
16	VCC4V0_SYS	P				4.0V	
18	VCC4V0_SYS	P				4.0V	
20	VCC4V0_SYS	P				4.0V	
22	CIF_HREF/BT1120_D8/I2S1_SDO1_M0/PCIE30X1_1_BUTTON_RSTN/I2C7_SCL_M3/UART8_RTSN_M0/PWM14_M1/SPI0_CS0_M1/CAN1_RX_M1/GPIO4_B2_u	I/O	UP	CAN1_RX_M1/GPIO4_B2	CAN1_RX_M1/GPIO4_B2	3.3V	AK25
24	CIF_D9/FSPI_CS1N_M2/PCIE30X4_WAKEN_M2/HDMI_TX1_SDA_M1/CAN2_TX_M0/UART5_RX_M1/SPI3_CS1_M3/GPIO3_C5_u	I/O	UP	UART5_RX_M1	UART5_RX_M1	VCCIO5	AH25
26	CIF_D10/PCIE30X4_PERSTN_M2/HDMI_TX1_SCL_M1/SPI3_MISO_M3/GPIO3_C6_u	I/O	UP	TP1_INT_L	TP1_INT Input， Active L	VCCIO5	AG26
28	CIF_D8/FSPI_CS0N_M2/PCIE30X4_CLKREQN_M2/HDMI_TX1_CEC_M2/CAN2_RX_M0/UART5_TX_M1/SPI3_CS0_M3/GPIO3_C4_u	I/O	UP	UART5_TX_M1	UART5_TX_M1	VCCIO5	AH26
30	CIF_CLKOUT/BT1120_D10/I2S1_SDO3_M0/PCIE30X4_CLKREQN_M1/DP0_HPDIN_M0/SPDIF0_TX_M1/UART9_TX_M1/PWM11_IR_M1/GPIO4_B4_u	I/O	UP	PCIE30X4_CLKREQN_M1_L	PCIE30X4_CLKREQN_M1_L	3.3V	AL26
32	CIF_D0/BT1120_D0/I2S1_MCLK_M0/PCIE30X1_1_CLKREQN_M1/UART9_RTSN_M1/SPI0_MISO_M1/GPIO4	I/O	DOWN	HDMI0_TX_ON_H	HDMI0_TX_ON EN, Active H	3.3V	AK30
34	CIF_D1/BT1120_D1/I2S1_SCLK_M0/PCIE30X1_1_WAKEN_M1/UART9_CTSN_M1/SPI0_MOSI_M1/GPIO4_A	I/O	DOWN	I2S1_SCLK_M0_BT	I2S1_SCLK_M0_BT	3.3V	AL30
36	BT1120_D12/PCIE30X4_PERSTN_M1/HDMI_RX_HPDOUT_M0/SATA0_ACT_LED_M0/I2C5_SCL_M1/PWM13_M1/SPI3_MOSI_M1/GPIO4_B6_d	I/O	DOWN	PCIE30X4_PERSTN_M1_L	PCIE30X4_PERSTN_M1_L	3.3V	AJ27
38	BT1120_D11/PCIE30X4_WAKEN_M1/HDMI_RX_CEC_M0/SATA1_ACT_LED_M0/UART9_RX_M1/PWM12_M1/SPI3_MISO_M1/GPIO4_B5_d	I/O	DOWN	PCIE30X4_WAKEN_M1_L/GPIO4_B5	PCIE30X4_WAKEN_M1_L/GPIO4_B5	3.3V	AJ26
40	CIF_D2/BT1120_D2/I2S1_LRCK_M0/PCIE30X1_1_PERSTN_M1/SPI0_CLK_M1/GPIO4_A2_d	I/O	DOWN	I2S1_LRCK_M0_BT	I2S1_LRCK_M0_BT	3.3V	AM29
42	CIF_CLKIN/BT1120_CLKOUT/I2S1_SDI3_M0/PCIE30X2_PERSTN_M1/I2C6_SDA_M3/UART8_TX_M0/SPI2_CS1_M1/GPIO4_B0_d	I/O	DOWN	PHONE_CTL	PHONE_Output EN , Active H	3.3V	AK26
44	GND	G		GND	GND	GND	

46	SDMMC_DET/GPIO0_A4_u	I/O	UP	SDMMC_DET_L	SDMMC_DET Input , Active L Core board Pull up resistance 100K	1.8V	P31
48	SDMMC_D1/PDM1_SDI2_M0/JTAG_TMS_M1/I2C3_SDA_M4/UART2_RX_M1/PWM9_M1/GPIO4_D1_u	I/O	UP	SDMMC0_D1	SDMMC0_D1/UART2_RX_M1 Core board Pull up resistance 10K	VCCIO_SD_S0	AD1
50	SDMMC_D0/PDM1_SDI3_M0/JTAG_TCK_M1/I2C3_SCL_M4/UART2_TX_M1/PWM8_M1/GPIO4_D0_u	I/O	UP	SDMMC0_D0/UART2_TX_M1	SDMMC0_D0/UART2_TX_M1 Core board Pull up resistance 10K	VCCIO_SD_S0	AD2
52	SDMMC_CLK/PDM1_CLK0_M0/TEST_CLKOUT_M0/MCU_JTAG_TMS_M0/CAN0_RX_M1/UART5_TX_M0/GPIO4_D5_d	I/O	DOWN	SDMMC_CLK	SDMMC_CLK Core board Pull up resistance 10K	VCCIO_SD_S0	AE1
54	SDMMC_CMD/PDM1_CLK1_M0/MCU_JTAG_TCK_M0/CAN0_TX_M1/UART5_RX_M0/PWM7_IR_M1/GPIO4_D4_u	I/O	UP	SDMMC_CMD	SDMMC_CMD Core board Pull up resistance 10K	VCCIO_SD_S0	AE2
56	SDMMC_D3/PDM1_SDI0_M0/JTAG_TMS_M0/I2C8_SDA_M0/UART5_RTSN_M0/PWM10_M1/GPIO4_D3_u	I/O	UP	SDMMC_D3	SDMMC_D3 Core board Pull up resistance 10K	VCCIO_SD_S0	AF1
58	SDMMC_D2/PDM1_SDI1_M0/JTAG_TCK_M0/I2C8_SCL_M0/UART5_CTSN_M0/GPIO4_D2_u	I/O	UP	SDMMC_D2	SDMMC_D2 Core board Pull up resistance 10K	VCCIO_SD_S0	AF2
60	GND	G		GND	GND	GND	
62	CIF_D7/BT1120_D7/I2S1_SDI2_M0/PCIE30X2_WAKEN_M1/I2C5_SDA_M2/SPI2_CS0_M1/GPIO4_A7_d	I/O	DOWN	PCIE30X2_WAKEN_M1	PCIE30X2_WAKEN_M1	3.3V	AM27
64	CIF_D6/BT1120_D6/I2S1_SDI1_M0/PCIE30X2_CLKREQN_M1/I2C5_SCL_M2/UART3_RX_M2/SPI2_CLK_M1/GPIO4_A6_d	I/O	DOWN	PCIE30X2_CLKREQN_M1	PCIE30X2_CLKREQN_M1	3.3V	AL27
66	TYPEC1_SSRX1P/DP1_TX0P	I		TYPEC1_SSRX1P	TYPEC1_SSRX1P		AN8
68	TYPEC1_SSRX1N/DP1_TX0N	I		TYPEC1_SSRX1N	TYPEC1_SSRX1N		AP8
70	TYPEC1_SSTX1N/DP1_TX1N	O		TYPEC1_SSTX1N	TYPEC1_SSTX1N		AN9
72	TYPEC1_SSTX1P/DP1_TX1P	O		TYPEC1_SSTX1P	TYPEC1_SSTX1P		AP9
74	TYPEC1_SSRX2P/DP1_TX2P	O		DP1_TX2P	DP1_TX2P		AN10
76	TYPEC1_SSRX2N/DP1_TX2N	O		DP1_TX2N	DP1_TX2N		AP10
78	TYPEC1_SSTX2N/DP1_TX3N	O		DP1_TX3N	DP1_TX3N		AN11
80	TYPEC1_SSTX2P/DP1_TX3P	O		DP1_TX3P	DP1_TX3P		AP11
	VCCIO_SD_S0 (1.8V/3.3V auto switch): 1.8V--SDIO3.0; 3.3V--SDIO2.0						
PIN	**(J2) iCORE-3588Q pin definition**	**Pad type**	**IO Pull**	**Function for Mainboard (MB-Q-RK3588)**	**Defual function description**	**IO Power domain**	**RK3588 Pin Number**
1	MIPI_DPHY0_TX_D2P/MIPI_CPHY0_TX_TRIO2_B	O		MIPI_DPHY0_TX_D2P	MIPI_DPHY0_TX_D2P		AN27
3	MIPI_DPHY0_TX_D2N/MIPI_CPHY0_TX_TRIO2_A	O		MIPI_DPHY0_TX_D2N	MIPI_DPHY0_TX_D2N		AP27
5	MIPI_DPHY0_TX_CLKP/MIPI_CPHY0_TX_TRIO1_C	O		MIPI_DPHY0_TX_CLKP	MIPI_DPHY0_TX_CLKP		AN26
7	MIPI_DPHY0_TX_CLKN/MIPI_CPHY0_TX_TRIO1_B	O		MIPI_DPHY0_TX_CLKN	MIPI_DPHY0_TX_CLKN		AP26
9	MIPI_DPHY0_TX_D1P/MIPI_CPHY0_TX_TRIO1_A	O		MIPI_DPHY0_TX_D1P	MIPI_DPHY0_TX_D1P		AN25
11	MIPI_DPHY0_TX_D1N/MIPI_CPHY0_TX_TRIO0_C	O		MIPI_DPHY0_TX_D1N	MIPI_DPHY0_TX_D1N		AP25
13	MIPI_DPHY0_TX_D0P/MIPI_CPHY0_TX_TRIO0_B	O		MIPI_DPHY0_TX_D0P	MIPI_DPHY0_TX_D0P		AN24
15	MIPI_DPHY0_TX_D0N/MIPI_CPHY0_TX_TRIO0_A	O		MIPI_DPHY0_TX_D0N	MIPI_DPHY0_TX_D0N		AP24
17	GND	G		GND	GND	GND	
19	MIPI_DPHY1_TX_D3N/MIPI_CPHY1_TX_TRIO2_C	O		MIPI_DPHY1_TX_D3N	MIPI_DPHY1_TX_D3N		AP22
21	MIPI_DPHY1_TX_D3P/NO_USE	O		MIPI_DPHY1_TX_D3P	MIPI_DPHY1_TX_D3P		AN22

23	MIPI_DPHY1_TX_D2N/MIPI_CPHY1_TX_TRIO2_A	O		MIPI_DPHY1_TX_D2N	MIPI_DPHY1_TX_D2N		AP21
25	MIPI_DPHY1_TX_D2P/MIPI_CPHY1_TX_TRIO2_B	O		MIPI_DPHY1_TX_D2P	MIPI_DPHY1_TX_D2P		AN21
27	MIPI_DPHY1_TX_CLKN/MIPI_CPHY1_TX_TRIO1_B	O		MIPI_DPHY1_TX_CLKN	MIPI_DPHY1_TX_CLKN		AP20
29	MIPI_DPHY1_TX_CLKP/MIPI_CPHY1_TX_TRIO1_C	O		MIPI_DPHY1_TX_CLKP	MIPI_DPHY1_TX_CLKP		AN20
31	MIPI_DPHY1_TX_D1N/MIPI_CPHY1_TX_TRIO0_C	O		MIPI_DPHY1_TX_D1N	MIPI_DPHY1_TX_D1N		AP19
33	MIPI_DPHY1_TX_D1P/MIPI_CPHY1_TX_TRIO1_A	O		MIPI_DPHY1_TX_D1P	MIPI_DPHY1_TX_D1P		AN19
35	MIPI_DPHY1_TX_D0N/MIPI_CPHY1_TX_TRIO0_A	O		MIPI_DPHY1_TX_D0N	MIPI_DPHY1_TX_D0N		AP18
37	MIPI_DPHY1_TX_D0P/MIPI_CPHY1_TX_TRIO0_B	O		MIPI_DPHY1_TX_D0P	MIPI_DPHY1_TX_D0P		AN18
39	GND	G		GND	GND	GND	
41	TYPEC0_SSTX2P/DP0_TX3P	O		TYPEC0_SSTX2P	TYPEC0_SSTX2P		AP16
43	TYPEC0_SSTX2N/DP0_TX3N	O		TYPEC0_SSTX2N	TYPEC0_SSTX2N		AN16
45	TYPEC0_SSRX2N/DP0_TX2N	I		TYPEC0_SSRX2N	TYPEC0_SSRX2N		AP15
47	TYPEC0_SSRX2P/DP0_TX2P	I		TYPEC0_SSRX2P	TYPEC0_SSRX2P		AN15
49	TYPEC0_SSTX1P/DP0_TX1P	O		TYPEC0_SSTX1P	TYPEC0_SSTX1P		AP14
51	TYPEC0_SSTX1N/DP0_TX1N	O		TYPEC0_SSTX1N	TYPEC0_SSTX1N		AN14
53	TYPEC0_SSRX1N/DP0_TX0N	I		TYPEC0_SSRX1N	TYPEC0_SSRX1N		AP13
55	TYPEC0_SSRX1P/DP0_TX0P	I		TYPEC0_SSRX1P	TYPEC0_SSRX1P		AN13
57	GND	G		GND	GND	GND	
59	HDMI_TX1_D2N/EDP_TX1_D2N	O		NC	NC		AP6
61	HDMI_TX1_D2P/EDP_TX1_D2P	O		NC	NC		AN6
63	HDMI_TX1_D1N/EDP_TX1_D1N	O		HDMI1_TX1N_PORT/EDP1_TX_D1N	HDMI1_TX1N_PORT/EDP1_TX_D1N		AN5
65	HDMI_TX1_D1P/EDP_TX1_D1P	O		HDMI1_TX1P_PORT/EDP1_TX_D1P	HDMI1_TX1P_PORT/EDP1_TX_D1P		AM5
67	HDMI_TX1_D0N/EDP_TX1_D0N	O		HDMI1_TX0N_PORT/EDP1_TX_D0N	HDMI1_TX0N_PORT/EDP1_TX_D0N		AP4
69	HDMI_TX1_D0P/EDP_TX1_D0P	O		HDMI1_TX0P_PORT/EDP1_TX_D0P	HDMI1_TX0P_PORT/EDP1_TX_D0P		AN4
71	HDMI_TX1_D3N/EDP_TX1_D3N	O		NC	NC		AN3
73	HDMI_TX1_D3P/EDP_TX1_D3P	O		NC	NC		AM3
75	HDMI_TX1_SBDN/EDP_TX1_AUXN	I/O		HDMI1_TX_SBDN/EDP1_TX_AUXN	HDMI1_TX_SBDN/EDP1_TX_AUXN		AP2
77	HDMI_TX1_SBDP/EDP_TX1_AUXP	I/O		HDMI1_TX_SBDP/EDP1_TX_AUXP	HDMI1_TX_SBDP/EDP1_TX_AUXP		AN2
79	GND	G		GND	GND	GND	
81	HDMI_TX0_D2P/EDP_TX0_D2P	O		HDMI0_TX2P_PORT/EDP0_TX_D2P	HDMI0_TX2P_PORT/EDP0_TX_D2P		AL2
83	HDMI_TX0_D2N/EDP_TX0_D2N	O		HDMI0_TX2N_PORT/EDP0_TX_D2N	HDMI0_TX2N_PORT/EDP0_TX_D2N		AL1
85	HDMI_TX0_D1P/EDP_TX0_D1P	O		HDMI0_TX1P_PORT/EDP0_TX_D1P	HDMI0_TX1P_PORT/EDP0_TX_D1P		AK3
87	HDMI_TX0_D1N/EDP_TX0_D1N	O		HDMI0_TX1N_PORT/EDP0_TX_D1N	HDMI0_TX1N_PORT/EDP0_TX_D1N		AK2
89	HDMI_TX0_D0P/EDP_TX0_D0P	O		HDMI0_TX0P_PORT/EDP0_TX_D0P	HDMI0_TX0P_PORT/EDP0_TX_D0P		AJ2
91	HDMI_TX0_D0N/EDP_TX0_D0N	O		HDMI0_TX0N_PORT/EDP0_TX_D0N	HDMI0_TX0N_PORT/EDP0_TX_D0N		AJ1
93	HDMI_TX0_D3P/EDP_TX0_D3P	O		HDMI0_TX3P_PORT/EDP0_TX_D3P	HDMI0_TX3P_PORT/EDP0_TX_D3P		AH3
95	HDMI_TX0_D3N/EDP_TX0_D3N	O		HDMI0_TX3N_PORT/EDP0_TX_D3N	HDMI0_TX3N_PORT/EDP0_TX_D3N		AH2
97	HDMI_TX0_SBDP/EDP_TX0_AUXP	I/O		HDMI0_TX_SBDP/EDP0_TX_AUXP	HDMI0_TX_SBDP/EDP0_TX_AUXP		AG2
99	HDMI_TX0_SBDN/EDP_TX0_AUXN	I/O		HDMI0_TX_SBDN/EDP0_TX_AUXN	HDMI0_TX_SBDN/EDP0_TX_AUXN		AG1

PIN	(J2) iCORE-3588Q pin definition	Pad type	IO Pull	Function for Mainboard (MB-Q-RK3588)	Defual function description	IO Power domain	RK3588 Pin Number
2	MIPI_DPHY0_RX_D3P/NO_USE	I		MIPI_DPHY0_RX_D3P	MIPI_DPHY0_RX_D3P		AN34
4	MIPI_DPHY0_RX_D3N/MIPI_CPHY0_RX_TRIO2_C	I		MIPI_DPHY0_RX_D3N	MIPI_DPHY0_RX_D3N		AP33
6	MIPI_DPHY0_RX_D2P/MIPI_CPHY0_RX_TRIO2_B	I		MIPI_DPHY0_RX_D2P	MIPI_DPHY0_RX_D2P		AN33
8	MIPI_DPHY0_RX_D2N/MIPI_CPHY0_RX_Trio2_A	I		MIPI_DPHY0_RX_D2N	MIPI_DPHY0_RX_D2N		AP32
10	MIPI_DPHY0_RX_CLKP/MIPI_CPHY0_RX_TRIO1_C	I		MIPI_DPHY0_RX_CLKP	MIPI_DPHY0_RX_CLKP		AN32
12	MIPI_DPHY0_RX_CLKN/MIPI_CPHY0_RX_TRIO1_B	I		MIPI_DPHY0_RX_CLKN	MIPI_DPHY0_RX_CLKN		AP31
14	MIPI_DPHY0_RX_D1P/MIPI_CPHY0_RX_TRIO1_A	I		MIPI_DPHY0_RX_D1P	MIPI_DPHY0_RX_D1P		AN30
16	MIPI_DPHY0_RX_D1N/MIPI_CPHY0_RX_TRIO0_C	I		MIPI_DPHY0_RX_D1N	MIPI_DPHY0_RX_D1N		AP30
18	MIPI_DPHY0_RX_D0P/MIPI_CPHY0_RX_TRIO0_B	I		MIPI_DPHY0_RX_D0P	MIPI_DPHY0_RX_D0P		AN29
20	MIPI_DPHY0_RX_D0N/MIPI_CPHY0_RX_TRIO0_A	I		MIPI_DPHY0_RX_D0N	MIPI_DPHY0_RX_D0N		AP29
22	MIPI_DPHY0_TX_D3P/NO_USE	O		MIPI_DPHY0_TX_D3P	MIPI_DPHY0_TX_D3P		AN28
24	MIPI_DPHY0_TX_D3N/MIPI_CPHY0_TX_TRIO2_C	O		MIPI_DPHY0_TX_D3N	MIPI_DPHY0_TX_D3N		AP28
26	GND	G		GND	GND	GND	
28	PCIE30_PORT0_RX0P	I		PCIE30_PORT0_RX0P	PCIE30_PORT0_RX0P		G33
30	PCIE30_PORT0_RX0N	I		PCIE30_PORT0_RX0N	PCIE30_PORT0_RX0N		G34
32	PCIE30_PORT0_TX0P	O		PCIE30_PORT0_TX0P	PCIE30_PORT0_TX0P		D32
34	PCIE30_PORT0_TX0N	O		PCIE30_PORT0_TX0N	PCIE30_PORT0_TX0N		D33
36	PCIE30_PORT0_RX1P	I		PCIE30_PORT0_RX1P	PCIE30_PORT0_RX1P		F32
38	PCIE30_PORT0_RX1N	I		PCIE30_PORT0_RX1N	PCIE30_PORT0_RX1N		F33
40	PCIE30_PORT0_TX1P	O		PCIE30_PORT0_TX1P	PCIE30_PORT0_TX1P		C33
42	PCIE30_PORT0_TX1N	O		PCIE30_PORT0_TX1N	PCIE30_PORT0_TX1N		C34
44	PCIE30_PORT0_REF_CLKN	I		PCIE30_PORT0_REFCLKN_IN	PCIE30_PORT0_REFCLKN_IN		E34
46	PCIE30_PORT0_REF_CLKP	I		PCIE30_PORT0_REFCLKP_IN	PCIE30_PORT0_REFCLKP_IN		E33
48	GND	G		GND	GND	GND	
50	PCIE30_PORT1_RX0P	I		PCIE30_PORT1_RX2P	PCIE30_PORT1_RX2P		B32
52	PCIE30_PORT1_RX0N	I		PCIE30_PORT1_RX2N	PCIE30_PORT1_RX2N		A32
54	PCIE30_PORT1_TX0P	O		PCIE30_PORT1_TX2P	PCIE30_PORT1_TX2P		B30
56	PCIE30_PORT1_TX0N	O		PCIE30_PORT1_TX2N	PCIE30_PORT1_TX2N		A30
58	PCIE30_PORT1_RX1P	I		PCIE30_PORT1_RX3P	PCIE30_PORT1_RX3P		C31
60	PCIE30_PORT1_RX1N	I		PCIE30_PORT1_RX3N	PCIE30_PORT1_RX3N		B31
62	PCIE30_PORT1_TX1P	O		PCIE30_PORT1_TX3P	PCIE30_PORT1_TX3P		C29
64	PCIE30_PORT1_TX1N	O		PCIE30_PORT1_TX3N	PCIE30_PORT1_TX3N		B29
66	PCIE30_PORT1_REF_CLKP	I		PCIE30_PORT1_REFCLKP_IN	PCIE30_PORT1_REFCLKP_IN		A28
68	PCIE30_PORT1_REF_CLKN	I		PCIE30_PORT1_REFCLKN_IN	PCIE30_PORT1_REFCLKN_IN		B28
70	GND	G		GND	GND	GND	
72	MIPI_DPHY1_RX_D3N/MIPI_CPHY1_RX_TRIO2_C	I		MIPI_DPHY1_RX_D3N	MIPI_DPHY1_RX_D3N		AL22
74	MIPI_DPHY1_RX_D3P/NO_USE	I		MIPI_DPHY1_RX_D3P	MIPI_DPHY1_RX_D3P		AK22
76	MIPI_DPHY1_RX_D2N/MIPI_CPHY1_RX_TRIO2_A	I		MIPI_DPHY1_RX_D2N	MIPI_DPHY1_RX_D2N		AL21

78	MIPI_DPHY1_RX_D2P/MIPI_CPHY1_RX_TRIO2_B	I		MIPI_DPHY1_RX_D2P	MIPI_DPHY1_RX_D2P		AK21
80	MIPI_DPHY1_TX_CLKN/MIPI_CPHY1_TX_TRIO1_B	I		MIPI_DPHY1_RX_CLKN	MIPI_DPHY1_RX_CLKN		AL20
82	MIPI_DPHY1_TX_CLKP/MIPI_CPHY1_TX_TRIO1_C	I		MIPI_DPHY1_RX_CLKP	MIPI_DPHY1_RX_CLKP		AK20
84	MIPI_DPHY1_RX_D1N/MIPI_CPHY1_RX_TRIO0_C	I		MIPI_DPHY1_RX_D1N	MIPI_DPHY1_RX_D1N		AL19
86	MIPI_DPHY1_RX_D1P/MIPI_CPHY1_RX_TRIO1_A	I		MIPI_DPHY1_RX_D1P	MIPI_DPHY1_RX_D1P		AK19
88	MIPI_DPHY1_RX_D0N/MIPI_CPHY1_RX_TRIO0_A	I		MIPI_DPHY1_RX_D0N	MIPI_DPHY1_RX_D0N		AL18
90	MIPI_DPHY1_RX_D0P/MIPI_CPHY1_RX_TRIO0_B	I		MIPI_DPHY1_RX_D0P	MIPI_DPHY1_RX_D0P		AK18
92	GND	G		GND	GND	GND	
94	TYPEC0_SBU2/DP0_AUXN	I/O		TYPEC0_SBU2	TYPEC0_SBU2	1.8V	AM15
96	TYPEC0_SBU1/DP0_AUXP	I/O		TYPEC0_SBU1	TYPEC0_SBU1	1.8V	AL15
98	TYPEC0_USB20_OTG_DM	I/O		TYPEC0_OTG_DM	TYPEC0_OTG_DM		AM12
100	TYPEC0_USB20_OTG_DP	I/O		TYPEC0_OTG_DP	TYPEC0_OTG_DP		AL12
PIN	**(J3) iCORE-3588Q pin definition**	**Pad type**	**IO Pull**	**Function for Mainboard (MB-Q-RK3588)**	**Defual function description**	**IO Power domain**	**RK3588 Pin Number**
1	GND	G		GND	GND	GND	
3	PCIE20_0_RXP/SATA30_0_RXP	I		PCIE20_0_RXP/SATA30_0_RXP	PCIE20_0_RXP/SATA30_0_RXP		N33
5	PCIE20_0_RXN/SATA30_0_RXN	I		PCIE20_0_RXN/SATA30_0_RXN	PCIE20_0_RXN/SATA30_0_RXN		N34
7	PCIE20_0_TXN/SATA30_0_TXN	O		PCIE20_0_TXN/SATA30_0_TXN	PCIE20_0_TXN/SATA30_0_TXN		M33
9	PCIE20_0_TXP/SATA30_0_TXP	O		PCIE20_0_TXP/SATA30_0_TXP	PCIE20_0_TXP/SATA30_0_TXP		M34
11	PCIE20_0_REFCLKP	O		PCIE20_0_TXP	PCIE20_0_TXP		L32
13	PCIE20_0_REFCLKN	O		PCIE20_0_TXN	PCIE20_0_TXN		L33
15	PCIE20_1_TXP/SATA30_1_TXP	O		PCIE20_1_TXP/SATA30_1_TXP	PCIE20_1_TXP/SATA30_1_TXP		K33
17	PCIE20_1_TXN/SATA30_1_TXN	O		PCIE20_1_TXN/SATA30_1_TXN	PCIE20_1_TXN/SATA30_1_TXN		K34
19	PCIE20_1_RXP/SATA30_1_RXP	I		PCIE20_1_RXP/SATA30_1_RXP	PCIE20_1_RXP/SATA30_1_RXP		J33
21	PCIE20_1_RXN/SATA30_1_RXN	I		PCIE20_1_RXN/SATA30_1_RXN	PCIE20_1_RXN/SATA30_1_RXN		J34
23	PCIE20_1_REFCLKP	O		PCIE20_1_REFCLKP	PCIE20_1_REFCLKP		H32
25	PCIE20_1_REFCLKN	O		PCIE20_1_REFCLKN	PCIE20_1_REFCLKN		H33
27	PCIE20_2_RXP/SATA30_2_RXP/USB30_2_SSRXP	I		PCIE20_2_RXP/SATA30_2_RXP	PCIE20_2_RXP/SATA30_2_RXP		J31
29	PCIE20_2_RXN/SATA30_2_RXN/USB30_2_SSRXN	I		PCIE20_2_RXN/SATA30_2_RXN	PCIE20_2_RXN/SATA30_2_RXN		J30
31	PCIE20_2_TXP/SATA30_2_TXP/USB30_2_SSTXP	O		PCIE20_2_TXP/SATA30_2_TXP	PCIE20_2_TXP/SATA30_2_TXP		H30
33	PCIE20_2_TXN/SATA30_2_TXN/USB30_2_SSTXN	O		PCIE20_2_TXN/SATA30_2_TXN	PCIE20_2_TXN/SATA30_2_TXN		H29
35	PCIE20_2_REFCLKP	O		NC	NC		G31
37	PCIE20_2_REFCLKN	O		NC	NC		G30
39	GND	G		GND	GND	GND	
41	GMAC0_PTP_REFCLK/FSPI_CS0N_M1/HDMI_TX1_SDA_M0/I2C4_SDA_M1/UART7_RX_M0/GPIO2_B4_u	I/O	UP	LCD_RESET_L	LCD0_RESET Output, Active L	1.8V	AB31
43	I2S0_MCLK/I2C6_SDA_M1/UART3_RTSN/PWM3_IR_M2/SPI4_CLK_M0/GPIO1_C2_d	I/O	DOWN	I2S0_MCLK	I2S0_MCLK	1.8V	F30
45	I2S0_SDO0/I2C4_SCL_M4/UART4_CTSN/GPIO1_C7_d	I/O	DOWN	I2S0_SDO0	I2S0_SDO0	1.8V	E29
47	I2S0_SCLK/I2C6_SCL_M1/UART3_CTSN/PWM7_IR_M2/SPI4_CS0_M0/GPIO1_C3_d	I/O	DOWN	I2S0_SCLK_TX	I2S0_SCLK_Output	1.8V	E31
49	I2S0_LRCK/I2C2_SCL_M3/UART4_RTSN/GPIO1_C5_d	I/O	DOWN	I2S0_LRCK_TX	I2S0_LRCK_Output	1.8V	D30
51	I2S0_SDI0/GPIO1_D4_d	I/O	DOWN	I2S0_SDI0	I2S0_SDI0	1.8V	D28

53	PDM0_CLK0_M0/I2C4_SDA_M4/PWM15_IR_M2/GPIO1_C6_d	I/O	DOWN	PWM15_M2	PWM15_M2	1.8V	D29
55	PDM0_CLK1_M0/I2C2_SDA_M3/PWM11_IR_M2/SPI4_CS1_M0 /GPIO1_C4_d	I/O	DOWN	HP_DET_L	HP_DET, Active L	1.8V	E30
57	MIPI_CAMERA2_CLK_M0/SPDIF1_TX_M0/PCIE30X2_PERSTN_M3/HDMI_RX_CEC_M2/SATA2_ACT_LED_M 1/I2C5_SDA_M3/UART1_RX_M1/PWM13_M2/GPIO1_B7_u	I/O	UP	I2C5_SDA_M3/UART1_RX_M1	I2C5_SDA_M3/UART1_RX_M1	1.8V	E27
59	MIPI_CAMERA1_CLK_M0/SPDIF0_TX_M0/PCIE30X2_WAKEN_M3/HDMI_RX_HPDOUT_M2/I2C5_SCL_M3/ UART1_TX_M1/GPIO1_B6_u	I/O	UP	I2C5_SCL_M3/UART1_TX_M1	I2C5_SCL_M3/UART1_TX_M1	1.8V	E26
61	MIPI_CAMERA4_CLK_M0/PCIE30X2_CLKREQN_M3/HDMI_RX_SDA_M2/I2C8_SDA_M2/UART1_CTSN_M1/ PWM15_IR_M3/GPIO1_D7_u	I/O	UP	MIPI_CAM4_CLKOUT	MIPI_CAM4_CLK Output	1.8V	F25
63	MIPI_CAMERA3_CLK_M0/HDMI_RX_SCL_M2/I2C8_SCL_M2/UART1_RTSN_M1/PWM14_M2/GPIO1_D6_u	I/O	UP	MIPI_CAM3_CLKOUT	MIPI_CAM3_CLK Output	1.8V	F24
65	GND	G		GND	GND	GND	
67	PCIE30X4_BUTTON_RSTN/DP1_HPDIN_M0/MCU_JTAG_TMS_M1/UART9_TX_M2/PWM11_IR_M3/SPI0_CS 1_M3/GPIO3_D5_d	I/O	DOWN	DP1_HPDIN_M0	DP1_HPDIN_M0	VCCIO5	AB28
69	GMAC0_PPSTRIG/FSPI_CS1N_M1/HDMI_TX1_SCL_M0/I2C4_SCL_M1/UART7_TX_M0/GPIO2_B5_u	I/O	UP	LCD_BL_EN_H	LCD0_BL_EN, Active H	1.8V	AB30
71	GMAC0_PPSCLK/TEST_CLKOUT_M1/HDMI_TX1_CEC_M0/UART9_RX_M0/SPI1_CS1_M0/GPIO2_C4_d	I/O	DOWN	GPIO2_C4_d	GPIO2_C4	1.8V	AC30
73	PDM1_SDI2_M1/PCIE30X4_WAKEN_M3/SPI0_MISO_M2/GPIO1_B1_d	I/O	DOWN	MIPI_CAM4_PWREN_H	MIPI_CAM4_Power EN, Active H	1.8V	D25
75	PDM1_SDI0_M1/PCIE30X1_1_PERSTN_M2/PWM3_IR_M3/SPI2_CS0_M0/GPIO1_A7_u	I/O	UP	PWM11_M3	PWM11_M3 Output	1.8V	C25
77	HDMI_TX1_HPD_M0/SPI2_CLK_M0/GPIO1_A6_d	I/O	DOWN	MIPI_CAM3_PDN_L	MIPI_CAM3_PDN_L	1.8V	C24
79	PDM1_CLK0_M1/PCIE30X1_0_PERSTN_M2/UART7_RX_M2/SPI0_CS0_M2/GPIO1_B4_u	I/O	UP	PCIEX1_0_PERSTN_M1_L	PCIEX1_0_PERSTN_M1_L	1.8V	E24
PIN	**(J3) iCORE-3588Q pin definition**	**Pad type**	**IO Pull**	**Function for Mainboard (MB-Q-RK3588)**	**Defual function description**	**IO Power domain**	**RK3588 Pin Number**
2	CIF_D4/BT1120_D4/PCIE30X1_0_WAKEN_M1/I2C3_SCL_M2/UART0_RX_M2/SPI2_MISO_M1/GPIO4_A4_d	I/O	DOWN	UART0_RX_M2	UART0_RX_M2	3.3V	AL28
4	CIF_D3/BT1120_D3/PCIE30X1_0_CLKREQN_M1/UART0_TX_M2/GPIO4_A3_d	I/O	DOWN	UART0_TX_M2	UART0_TX_M2	3.3V	AL29
6	I2S1_SDI2_M1/PDM0_SDI0_M1/I2C6_SDA_M0/UART1_RT SN_M2/PWM6_M0/SPI0_MISO_M0/PCIE30X4_WAKEN_M0/G PIO0_C7_d	I/O	DOWN	I2C6_SDA_M0	I2C6_SDA_M0	1.8V	V31
8	I2S1_SDI3_M1/PDM0_SDI1_M1/I2C6_SCL_M0/UART1_CTSN_M2/PWM7_IR_M0/SPI3_MISO_M2/PCIE30X 4_PERSTN_M0/GPIO0_D0_d	I/O	DOWN	I2C6_SCL_M0	I2C6_SCL_M0	1.8V	W31
10	PDM0_CLK0_M1/PWM1_M0/I2C2_SDA_M0/CAN0_RX_M0/SPI0_MOSI_M0/PCIE30X1_0_CLKREQN_M0/G PIO0_C0_d	I/O	DOWN	GMAC1_INT/PMEB_1	GMAC1_INT/PMEB_1	1.8V	T31
12	I2S1_LRCK_M1/PWM0_M0/I2C2_SCL_M0/CAN0_TX_M0/SPI0_CS1_M0/PCIE30X1_1_PERSTN_M0/GPIO0_B	I/O	DOWN	GMAC0_INT/PMEB_1	GMAC0_INT/PMEB_1	1.8V	T28
14	I2C1_SDA_M2 (I2C for NPU)	I/O	UP	I2C1_SDA_M2_TP	I2C1_SDA_M2_TP Core board Pull up resistance 2.2K	1.8V	V28
16	I2C1_SCL_M2 (I2C for NPU)	I/O	UP	I2C1_SCL_M2_TP	I2C1_SCL_M2_TP Core board Pull up resistance 2.2K	1.8V	V29
18	I2S1_SDI1_M1/NPU_AVS/UART0_RTSN/PWM5_M1/SPI0_CLK_M0/PCIE30X4_CLKREQN_M0/SATA_CP_PO D/GPIO0_C6_u	I/O	UP	BT_REG_ON_H	BT_EN Output, Active H	1.8V	T29
20	GMAC1_PPSTRIG/I2C3_SDA_M1/UART7_TX_M1/SPI1_MISO_M1/GPIO3_C0_d	I/O	DOWN	TP_INT_L	TP0_INT Input, Active L	VCCIO5	Y29

22	HDMI_TX0_HPD_M1/PCIE30X2_PERSTN_M2/HDMI_RX_H PDOUT_M1/MCU_JTAG_TCK_M1/UART9_RX_M2/SPI0_CS0_M 3/GPIO3_D4_d	I/O	DOWN	HDMIIRX_HPDOUT_H	HDMIIRX_HPD Output,, Active H	VCCIO5	AA27
24	I2C3_SDA_M0/UART3_RX_M0/SPI4_MISO_M0/GPIO1_C0_z	I/O		I2C3_SDA_M0_MIPI	I2C3_SDA_M0_MIPI	1.8V	G29
26	I2C3_SCL_M0/UART3_TX_M0/SPI4_MOSI_M0/GPIO1_C1_z	I/O		I2C3_SCL_M0_MIPI	I2C3_SCL_M0_MIPI	1.8V	G27
28	I2S1_SCLK_M1/JTAG_TMS_M2/I2C1_SDA_M0/UART2_RX_M0/PCIE30X1_1_WAKEN_M0/GPIO0_B6_d	I/O	DOWN	UART2_RX_M0_DEBUG	UART2_RX_M0 (System DEBUG)	1.8V	R29
30	I2S1_MCLK_M1/JTAG_TCK_M2/I2C1_SCL_M0/UART2_TX_M0/PCIE30X1_1_CLKREQN_M0/GPIO0_B5_d	I/O	DOWN	UART2_TX_M0_DEBUG	UART2_TX_M0 (System DEBUG)	1.8V	P29
32	GMAC1_PPSCLK/PCIE30X2_BUTTON_RSTN/UART7_RX_M1/SPI1_CLK_M1/GPIO3_C1_d	I/O	DOWN	TP0_RST_L	TP0_Reset Input, Active L	VCCIO5	Y27
34	PDM0_CLK1_M1/PWM2_M0/UART0_RX_M0/I2C4_SDA_M2/DP0_HPDIN_M1/PCIE30X1_0_WAKEN_M0/G PIO0_C4_d	I/O	DOWN	WIFI_REG_ON_H	WIFI_EN Output, Active H	1.8V	R30
36	I2S1_SDI0_M1/GPU_AVS/UART0_TX_M0/I2C4_SCL_M2/DP1_HPDIN_M1/PWM4_M0/PCIE30X1_0_PERSTN _M0/GPIO0_C5_u	I/O	UP	HOST_WAKE_BT_H	HOST_WAKE_BT_H	1.8V	P30
38	CLK32K_IN/CLK32K_OUT0/GPIO0_B2__u	I/O	UP	WIFI_WAKE_HOST_H	WIFI_WAKE_HOST_H	1.8V	K29
40	SPI2_CS1_M2/I2C1_SCL_M1/UART0_RX_M1/GPIO0_B0_z	I/O		RTC_INT_L	RTC_INT Input, Active L	1.8V	L30
42	REFCLK_OUT/GPIO0_A0_d	I/O	DOWN	BT_WAKE_HOST_H	BT_WAKE_HOST_H	1.8V	P33
44	HDMI_TX1_SDA_M2/I2C4_SCL_M3/UART6_CTSN_M1/PWM1_M2/SPI4_CS0_M2/GPIO1_A3_d	I/O	DOWN	UART6_CTSN_M1_BT	UART6_CTSN_M1_BT	1.8V	A27
46	HDMI_TX0_HPD_M0/SPI2_MOSI_M0/GPIO1_A5_d	I/O	DOWN	HDMITX0_HPDIN_M0	HDMITX0_HPD_Input, Active H	1.8V	B26
48	VOP_POST_EMPTY/I2C4_SDA_M3/UART6_RTSN_M1/PWM0_M2/SPI4_CLK_M2/GPIO1_A2_d	I/O	DOWN	UART6_RTSN_M1_BT	UART6_RTSN_M1_BT	1.8V	A26
50	HDMI_TX1_SCL_M2/SPI2_MISO_M0/GPIO1_A4_d	I/O	DOWN	VGA_HPDIN_L	VGA_HPD Input, Active L	1.8V	B25
52	PCIE30X1_1_WAKEN_M2/DP1_HPDIN_M2/SATA1_ACT_LED_M1/I2C2_SCL_M4/UART6_TX_M1/SPI4_MOSI _M2/GPIO1_A1_d	I/O	DOWN	UART6_TX_M1_BT	UART6_TX_M1_BT	1.8V	A25
54	PCIE30X1_1_CLKREQN_M2/DP0_HPDIN_M2/I2C2_SDA_M4/UART6_RX_M1/SPI4_MISO_M2/GPIO1_A0_d	I/O	DOWN	UART6_RX_M1_BT	UART6_RX_M1_BT	1.8V	A24
56	I2S0_SDO3/I2S0_SDI2/PDM0_SDI2_M0/I2C1_SCL_M4/UART4_TX_M0/PWM0_M1/SPI1_CLK_M2/GPIO1_D	I/O	DOWN	SPI1_CLK_M2/UART4_TX_M0/I2C1_SCL_M4	SPI1_CLK_M2/UART4_TX_M0/I2C1_SCL_M4	1.8V	F28
58	PDM0_SDI0_M0/SPI1_CS1_M2/GPIO1_D5_d	I/O	DOWN	HDMIIRX_DET_L	HDMIIRX_DET Input, Active L	1.8V	G26
60	I2S0_SDI1/PDM0_SDI3_M0/I2C1_SDA_M4/UART4_RX_M0/PWM1_M1/SPI1_CS0_M2/GPIO1_D3_d	I/O	DOWN	SPI1_CS0_M2/UART4_RX_M0/I2C1_SDA_M	SPI1_CS0_M2/UART4_RX_M0/I2C1_SDA_M4	1.8V	E28
62	I2S0_SDO2/I2S0_SDI3/PDM0_SDI1_M0/I2C7_SDA_M0/UART6_RX_M2/SPI1_MOSI_M2/GPIO1_D1_d	I/O	DOWN	SPI1_MOSI_M2/UART6_RX_M2/I2C7_SDA_ M0	SPI1_MOSI_M2/UART6_RX_M2/I2C7_SDA_M0	1.8V	F27
64	I2S0_SDO1/I2C7_SCL_M0/UART6_TX_M2/SPI1_MISO_M2/GPIO1_D0_d	I/O	DOWN	SPI1_MISO_M2/UART6_TX_M2/I2C7_SCL_	SPI1_MISO_M2/UART6_TX_M2/I2C7_SCL_M0	1.8V	F26
66	PDM1_SDI1_M1/PCIE30X4_CLKREQN_M3/SPI2_CS1_M0/GPIO1_B0_u	I/O	UP	RESET0_CAM	Mipi Camera Reset Output, Active L	1.8V	C27
68	PDM1_CLK1_M1/PCIE30X1_0_WAKEN_M2/SATA0_ACT_LED_M1/UART4_TX_M2/SPI0_CLK_M2/GPIO1_B3	I/O	DOWN	PCIEX1_0_WAKEN_M1_L/GPIO1_B3	PCIEX1_0_WAKEN_M1_L/GPIO1_B3	1.8V	D27
70	PDM1_SDI3_M1/PCIE30X4_PERSTN_M3/UART4_RX_M2/SPI0_MOSI_M2/GPIO1_B2_d	I/O	DOWN	MIPI_CAM3_PWREN_H	MIPI_CAM3_Power EN, Active H	1.8V	D26
72	PCIE30X1_0_CLKREQN_M2/UART7_TX_M2/SPI0_CS1_M2/GPIO1_B5_u	I/O	UP	PCIEX1_0_CLKREQN_M1_L	PCIEX1_0_CLKREQN_M1_L	1.8V	E25
74	GMAC1_TXER/I2S2_SDI_M1/UART2_RX_M2/PWM3_IR_M1/GPIO3_B2_d	I/O	DOWN	WORK_LED	WORK_LED_EN, Active H	VCCIO5	AE28
76	CIF_D11/PCIE20X1_2_CLKREQN_M0/HDMI_TX0_SCL_M2/I2C5 _SCL_M0/SPI3_MOSI_M3/GPIO3_C7_u	I/O	UP	GMAC0_RSTN_L_	GMAC0_RSTN_L	VCCIO5	AJ24
78	CIF_D12/PCIE20X1_2_WAKEN_M0/HDMI_TX0_SDA_M2/I2C5_SDA_M0/UART4_RX_M1/PWM8_M2/SPI3_C LK_M3/GPIO3_D0_u	I/O	UP	EDP_BL_PWM1	EDP_BL_PWM1 Output	VCCIO5	AH24
80	VCCIO5_CTRL	I		NC	VCCIO5 1.8V/3.3V select Input H: VCCIO5=3.3V; (NC) L : VCCIO5=1.8V,	3.3V	

*Notes	VCCIO5 is controlled by VCCIO5_CTL. VCCIO5_CTL is Hight(3.3V): VCCIO5=3.3V; VCCIO5_CTL is Low(Or NC): VCCIO5=1.8V---Default						
PIN	(J4) iCORE-3588Q pin definition	Pad type	IO Pull	Function for Mainboard (MB-Q-RK3588)	Defual function description	IO Power domain	RK3588 Pin Number
1	VCC_1V8_S3	P		VCC_1V8_S3	1.8V Output (Pin1/3 Total Max:500mA)	1.8V	
3	VCC_1V8_S3	P				1.8V	
5	VCCA_RK806	O		VCCA_RK806	**Power supply Input (RK806's boot up**	5.0V	
7	GND	G		GND	GND	GND	
9	MIPI_CSI1_RX_CLK1P	I		MIPI_CSI1_RX_CLK1P	MIPI_CSI1_RX_CLK1P		AM31
11	MIPI_CSI1_RX_CLK1N	I		MIPI_CSI1_RX_CLK1N	MIPI_CSI1_RX_CLK1N		AM32
13	MIPI_CSI1_RX_D3P	I		MIPI_CSI1_RX_D3P	MIPI_CSI1_RX_D3P		AL31
15	MIPI_CSI1_RX_D3N	I		MIPI_CSI1_RX_D3N	MIPI_CSI1_RX_D3N		AL32
17	MIPI_CSI1_RX_D2P	I		MIPI_CSI1_RX_D2P	MIPI_CSI1_RX_D2P		AK31
19	MIPI_CSI1_RX_D2N	I		MIPI_CSI1_RX_D2N	MIPI_CSI1_RX_D2N		AK32
21	MIPI_CSI1_RX_CLK0P	I		MIPI_CSI1_RX_CLK0P	MIPI_CSI1_RX_CLK0P		AJ31
23	MIPI_CSI1_RX_CLK0N	I		MIPI_CSI1_RX_CLK0N	MIPI_CSI1_RX_CLK0N		AJ32
25	MIPI_CSI1_RX_D1P	I		MIPI_CSI1_RX_D1P	MIPI_CSI1_RX_D1P		AH31
27	MIPI_CSI1_RX_D1N	I		MIPI_CSI1_RX_D1N	MIPI_CSI1_RX_D1N		AH32
29	MIPI_CSI1_RX_D0P	I		MIPI_CSI1_RX_D0P	MIPI_CSI1_RX_D0P		AG31
31	MIPI_CSI1_RX_D0N	I		MIPI_CSI1_RX_D0N	MIPI_CSI1_RX_D0N		AG32
33	GND	G		GND	GND	GND	
35	SARADC_IN3	O		SARADC_VIN3	ADC3 Input	1.8V	AN17
37	SARADC_IN0_BOOT	I		BOOT_SARADC_IN0	ADC0 Input (BOOT Mode: L---Maskrom) Core board Pull up resistance 100K	1.8V	AM16
39	SARADC_IN1	I		SARADC_VIN1_KEY/RECOVERY	ADC1 Input/RECOVERY_KEY ,Active L Core board Pull up resistance 10K	1.8V	AL16
41	SARADC_IN6	O		SARADC_IN6	ADC6 Input	1.8V	AK17
43	CIF_D5/BT1120_D5/I2S1_SDI0_M0/PCIE30X1_0_PERSTN_M1/I2C3_SDA_M2/UART3_TX_M2/SPI2_MOSI_M1/GPIO4_A5_d	I/O	DOWN	I2S1_SDI_M0_BT	I2S1_SDI_M0_BT	3.3V	AK27
45	GND	G		GND	GND	GND	
47	GMAC0_TXCLK/SDIO_CLK_M0/FSPI_CLK_M1/I2C3_SDA_M3/GPIO2_B3_d	I/O	DOWN	GMAC0_TXCLK	GMAC0_TXCLK	1.8V	AE33
49	GMAC0_TXEN/I2S2_LRCK_M0/I2C2_SDA_M1/UART1_RTSN_M0/SPI1_CLK_M0/GPIO2_C0_d	I/O	DOWN	GMAC0_TXEN	GMAC0_TXEN	1.8V	AE34
51	GMAC0_TXD0/I2S2_MCLK_M0/I2C5_SCL_M4/UART1_RX_M0/GPIO2_B6_d	I/O	DOWN	GMAC0_TXD0	GMAC0_TXD0	1.8V	AD33
53	GMAC0_TXD1/I2S2_SCLK_M0/I2C5_SDA_M4/UART1_TX_M0/GPIO2_B7_d	I/O	DOWN	GMAC0_TXD1	GMAC0_TXD1	1.8V	AD34
55	GMAC0_TXD2/SDIO_D3_M0/FSPI_D3_M1/I2C8_SDA_M1/UART6_CTSN_M0/GPIO2_B1_u	I/O	UP	GMAC0_TXD2	GMAC0_TXD2	1.8V	AC33
57	GMAC0_TXD3/SDIO_CMD_M0/I2C3_SCL_M3/GPIO2_B2_u	I/O	UP	GMAC0_TXD3	GMAC0_TXD3	1.8V	AC34
59	GMAC1_RXCLK/SDIO_CLK_M1/MIPI_CAMERA0_CLK_M1/FSPI_CLK_M2/I2C4_SDA_M0/UART8_CTSN_M1/GPIO3_A5_d	I/O	DOWN	GMAC1_RXCLK	GMAC1_RXCLK	VCCIO5	AH30
61	GMAC1_RXDV_CRS/MIPI_CAMERA4_CLK_M1/UART2_TX_M2/PWM2_M1/GPIO3_B1_d	I/O	DOWN	GMAC1_RXDV_CRS	GMAC1_RXDV_CRS	VCCIO5	AH29

63	GMAC1_RXD0/MIPI_CAMERA2_CLK_M1/PWM8_M0/GPIO3_A7_u	I/O	UP	GMAC1_RXD0	GMAC1_RXD0	VCCIO5	AG29
65	GMAC1_RXD1/MIPI_CAMERA3_CLK_M1/PWM9_M0/GPIO3_B0_u	I/O	UP	GMAC1_RXD1	GMAC1_RXD1	VCCIO5	AG28
67	GMAC1_RXD3/SDIO_D3_M1/I2S3_SDO/AUDDSM_RN/FSPI_D3_M2/UART8_RX_M1/SPI4_CS0_M1/GPIO3_	I/O	UP	GMAC1_RXD3	GMAC1_RXD3	VCCIO5	AE27
69	GMAC1_RXD2/SDIO_D2_M1/I2S3_LRCK/AUDDSM_LP/FSPI_D2_M2/UART8_TX_M1/SPI4_CLK_M1/GPIO3_	I/O	UP	GMAC1_RXD2	GMAC1_RXD2	VCCIO5	AD27
71	GMAC1_TXCLK/SDIO_CMD_M1/I2S3_SDI/AUDDSM_RP/UART8_RTSN_M1/SPI4_CS1_M1/GPIO3_A4_d	I/O	DOWN	GMAC1_TXCLK	GMAC1_TXCLK	VCCIO5	AD28
73	GMAC1_TXD0/I2S2_SDO_M1/UART2_RTSN/GPIO3_B3_u	I/O	UP	GMAC1_TXD0	GMAC1_TXD0	VCCIO5	AC28
75	GMAC1_TXD1/I2S2_MCLK_M1/UART2_CTSN/GPIO3_B4_u	I/O	UP	GMAC1_TXD1	GMAC1_TXD1	VCCIO5	AC29
77	GMAC1_TXD3/SDIO_D1_M1/I2S3_SCLK/AUDDSM_LN/FSPI_D1_M2/I2C6_SCL_M4/PWM11_IR_M0/SPI4_MOSI_M1/GPIO3_A1_u	I/O	UP	GMAC1_TXD3	GMAC1_TXD3	VCCIO5	AA30
79	GMAC1_TXD2/SDIO_D0_M1/I2S3_MCLK/FSPI_D0_M2/I2C6_SDA_M4/PWM10_M0/SPI4_MISO_M1/GPIO3	I/O	UP	GMAC1_TXD2	GMAC1_TXD2	VCCIO5	AA29
PIN	**(J4) iCORE-3588Q pin definition**	**Pad type**	**IO Pull**	**Function for Mainboard (MB-Q-RK3588)**	**Defual function description**	**IO Power domain**	**RK3588 Pin Number**
2	VCC_3V3_S3	P		VCC_3V3_S3	3.3V Output (Pin2/4 Total Max:800mA)	3.3V	
4	VCC_3V3_S3	P				3.3V	
6	VDC_EXT	O		VDC_EXT	VDC power on signal Input，(auto power on)	5.0V	
8	GND	G		GND	GND	GND	
10	MIPI_CSI0_CLK1P	I		MIPI_CSI0_RX_CLK1P	MIPI_CSI0_RX_CLK1P		AM33
12	MIPI_CSI0_CLK1N	I		MIPI_CSI0_RX_CLK1N	MIPI_CSI0_RX_CLK1N		AM34
14	MIPI_CSI0_D3P	I		MIPI_CSI0_RX_D3P	MIPI_CSI0_RX_D3P		AL33
16	MIPI_CSI0_D3N	I		MIPI_CSI0_RX_D3N	MIPI_CSI0_RX_D3N		AL34
18	MIPI_CSI0_D2P	I		MIPI_CSI0_RX_D2P	MIPI_CSI0_RX_D2P		AK33
20	MIPI_CSI0_D2N	I		MIPI_CSI0_RX_D2N	MIPI_CSI0_RX_D2N		AK34
22	MIPI_CSI0_CLK0P	I		MIPI_CSI0_RX_CLK0P	MIPI_CSI0_RX_CLK0P		AJ33
24	MIPI_CSI0_CLK0N	I		MIPI_CSI0_RX_CLK0N	MIPI_CSI0_RX_CLK0N		AJ34
26	MIPI_CSI0_D1P	I		MIPI_CSI0_RX_D1P	MIPI_CSI0_RX_D1P		AH33
28	MIPI_CSI0_D1N	I		MIPI_CSI0_RX_D1N	MIPI_CSI0_RX_D1N		AH34
30	MIPI_CSI0_D0P	I		MIPI_CSI0_RX_D0P	MIPI_CSI0_RX_D0P		AG33
32	MIPI_CSI0_D0N	I		MIPI_CSI0_RX_D0N	MIPI_CSI0_RX_D0N		AG34
34	GND	G		GND	GND	GND	
36	PMIC_EXT_EN	O		PMIC_EXT_EN_OUT	PMIC_EXT_EN_Output, Active H	5.0V	
38	LITCPU_AVS/SPI3_CLK_M2/GPIO0_D3_u	I/O	UP	CC_INT_L	CC_INT_L	1.8V	U33
40	GMAC0_TXER/I2C0_SDA_M1/UART7_CTSN_M0/PWM7_IR_M3/SPI3_CLK_M0/GPIO4_C6_d	I/O	DOWN	PCIE_PWREN_H	PCIE_Power_EN Output, Active H	1.8V	AF33
42	NPOR	I		RESET_L	System Reset Input, Active L Core board Pull up resistance 10K	1.8V	M31
44	PWRON_L(RK806-1)	I		PWRON_L	Power_Key Input, Active L	VCCA_RK806	
46	CIF_VSYNC/BT1120_D9/I2S1_SDO2_M0/PCIE20X1_2_BUTTON_RSTN/I2C7_SDA_M3/UART8_CTSN_M0/PWM15_IR_M1/CAN1_TX_M1/GPIO4_B3_u	I/O	UP	CAN1_TX_M1/GPIO4_B3	CAN1_TX_M1/GPIO4_B3	3.3V	AM25
48	GND	G		GND	GND	GND	

50	ETH0_REFCLKO_25M/I2S2_SDI_M0/I2C6_SCL_M2/SPI1_CS0_M0/GPIO2_C3_d	I/O	DOWN	ETH0_REFCLKO_25M	GPIO2_C3	1.8V	AD30
52	GMAC0_RXDV_CRS/UART7_RTSN_M0/PWM2_M2/SPI3_CS0_M0/GPIO4_C2_d	I/O	DOWN	GMAC0_RXDV_CRS	GMAC0_RXDV_CRS	1.8V	AE31
54	GMAC0_RXCLK/SDIO_D2_M0/FSPI_D2_M1/I2C8_SCL_M1/UART6_RTSN_M0/GPIO2_B0_u	I/O	UP	GMAC0_RXCLK	GMAC0_RXCLK	1.8V	AE32
56	GMAC0_RXD1/I2C6_SDA_M2/UART9_TX_M0/SPI1_MOSI_M0/GPIO2_C2_d	I/O	DOWN	GMAC0_RXD1	GMAC0_RXD1	1.8V	AD31
58	GMAC0_RXD0/I2C2_SCL_M1/UART1_CTSN_M0/SPI1_MISO_M0/GPIO2_C1_d	I/O	DOWN	GMAC0_RXD0	GMAC0_RXD0	1.8V	AD32
60	GMAC0_RXD3/SDIO_D1_M0/FSPI_D1_M1/UART6_TX_M0/GPIO2_A7_u	I/O	UP	GMAC0_RXD3	GMAC0_RXD3	1.8V	AC31
62	GMAC0_RXD2/SDIO_D0_M0/FSPI_D0_M1/UART6_RX_M0/GPIO2_A6_u	I/O	UP	GMAC0_RXD2	GMAC0_RXD2	1.8V	AC32
64	GMAC0_MCLKINOUT/I2S2_SDO_M0/I2C7_SCL_M1/PWM4_M1/SPI3_CS1_M0/GPIO4_C3_d	I/O	DOWN	GMAC0_MCLKINOUT	GMAC0_MCLK Input/Output	1.8V	AF34
66	ETH1_REFCLKO_25M/MIPI_CAMERA1_CLK_M1/I2C4_SCL_M0/GPIO3_A6_d	I/O	DOWN	GPIO3_A6	GPIO3_A6	VCCIO5	AH27
68	GMAC0_MDIO/I2C0_SCL_M1/UART9_CTSN_M0/PWM6_M2/SPI3_MOSI_M0/GPIO4_C5_d	I/O	DOWN	GMAC0_MDIO	GMAC0_MDIO	1.8V	AB33
70	GMAC0_MDC/I2C7_SDA_M1/UART9_RTSN_M0/PWM5_M2/SPI3_MISO_M0/GPIO4_C4_d	I/O	DOWN	GMAC0_MDC	GMAC0_MDC	1.8V	AB34
72	GMAC1_MCLKINOUT/I2S2_LRCK_M1/CAN1_TX_M0/UART3_RX_M1/PWM13_M0/GPIO3_B6_d	I/O	DOWN	GMAC1_MCLKINOUT	GMAC1_MCLK Input/Output	VCCIO5	AE29
74	GMAC1_TXEN/I2S2_SCLK_M1/CAN1_RX_M0/UART3_TX_M1/PWM12_M0/GPIO3_B5_u	I/O	UP	GMAC1_TXEN	GMAC1_TXEN	VCCIO5	AD29
76	GMAC1_MDC/MIPI_TE0/I2C8_SCL_M4/UART7_RTSN_M1/PWM14_M0/SPI1_CS0_M1/GPIO3_C2_d	I/O	DOWN	GMAC1_MDC	GMAC1_MDC	VCCIO5	Y31
78	GMAC1_MDIO/MIPI_TE1/I2C8_SDA_M4/UART7_CTSN_M1/PWM15_IR_M0/SPI1_CS1_M1/GPIO3_C3_d	I/O	DOWN	GMAC1_MDIO	GMAC1_MDIO	VCCIO5	Y30
80	GMAC1_PTP_REF_CLK/HDMI_TX1_HPD_M1/I2C3_SCL_M1/SPI1_MOSI_M1/GPIO3_B7_d	I/O	DOWN	GMAC1_RSTN_L_GPIO3_B7	GMAC1_Rrset ,Active L	VCCIO5	AA28



T-CHIP INTELLIGENCE TECHNOLOGY

Contact Us
(+86)18688117175

E-mail
global@t-firefly.com

Website
www.t-firefly.com

Address
Room 2101, Hongyu Building, #57 Zhongshan 4Rd, East District, Zhongshan, Guangdong, China.