A company of SIM Tech

# SIM7600E_SIM7600E-H _Hardware Design_V1.02

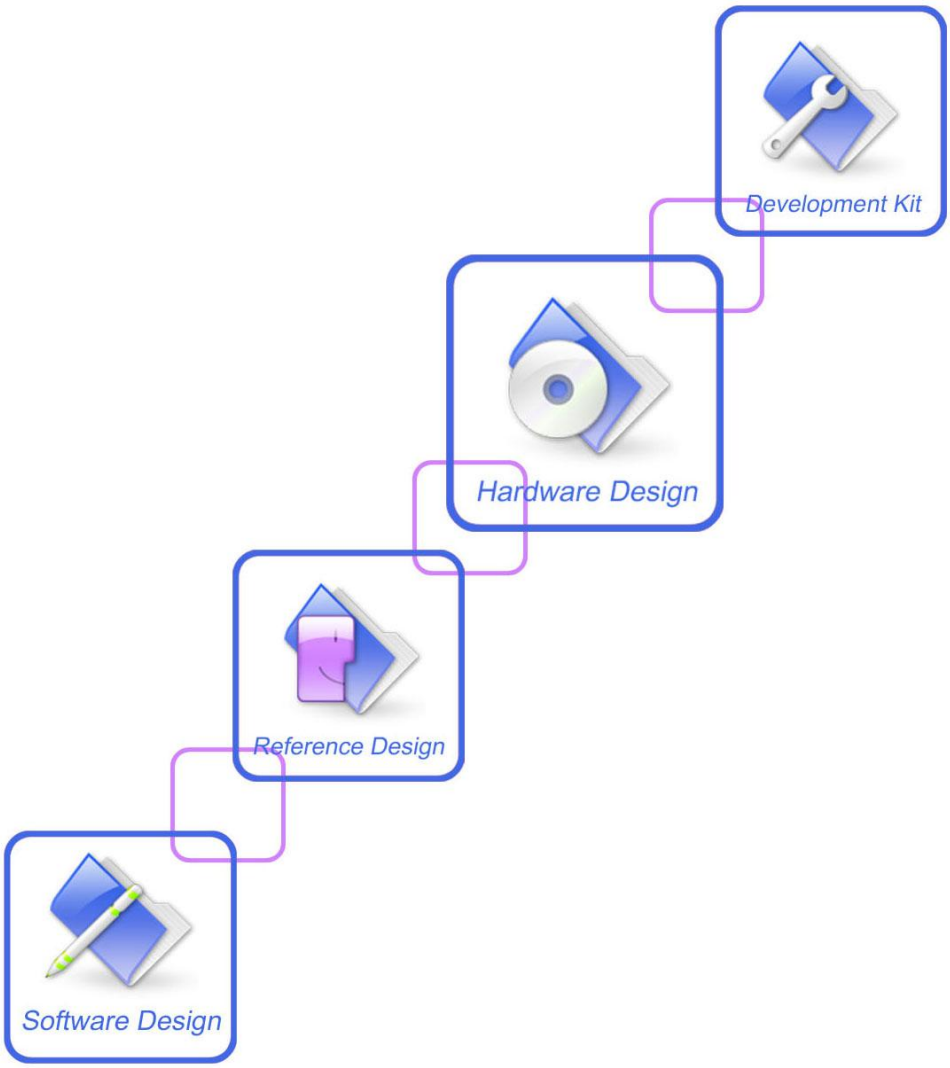

| | |
|---|---|
| **Document Title** | SIM7600E_SIM7600E-H _Hardware Design |
| **Version** | 1.02 |
| **Date** | 2022-11-03 |
| **Status** | Released |
| **Document Control ID** | SIM7600E_SIM7600E-H _Hardware Design _V1.02 |

## General Notes

SIMCom offers this information as a service to its customers to support the application and engineering efforts that use the products designed by SIMCom. The information provided is based on the requirements specifically from the customers. SIMCom has not undertaken any independent search for additional relevant information, including any information that may be in the customer's possession. Furthermore, the system validation of the product designed by SIMCom within a larger electronic system remains the responsibility of the customer or the customer's system integrator. All specifications supplied herein are subject to change without notice.

## Copyright

This document contains the proprietary technical information which is the property of SIMCom Limited, copying of this document, giving it to others, the using or communication of the contents thereof are forbidden without the official authority by SIMCom. Offenders are liable to the payment of the damages. All rights are reserved in the event of grant of a patent or the registration of a utility model or design. All specifications supplied herein are subject to change without notice

***Copyright © SIMCom Wireless Solutions Co., Ltd. 2022***

# Contents

**Contents** ..... **3**

**Table Index** ..... **5**

**Figure Index** ..... **7**

**Revision History** ..... **8**

**1 Introduction** ..... **9**
1.1 Product Outline ..... 9
1.2 Hardware Interface Overview ..... 10
1.3 Hardware Block Diagram ..... 11
1.4 Functional Overview ..... 12

**2 Package Information** ..... **14**
2.1 Pin Assignment Overview ..... 14
2.2 Pin Description ..... 16
2.3 Mechanical Information ..... 20
2.4 Footprint Recommendation ..... 20

**3 Interface Application** ..... **22**
3.1 Power Supply ..... 22
3.1.1 Power Supply Design Guide ..... 23
3.1.2 Recommended Power Supply Circuit ..... 24
3.1.3 Voltage Monitor ..... 24
3.2 Power on/Power off/Reset Function ..... 25
3.2.1 Power on ..... 25
3.2.2 Power off ..... 26
3.2.3 Reset Function ..... 27
3.3 UART Interface ..... 28
3.3.1 UART Design Guide ..... 28
3.3.2 RI and DTR Behavior ..... 29
3.4 USB Interface ..... 30
3.5 USIM Interface ..... 31
3.5.1 USIM Application Guide ..... 31
3.6 PCM Interface ..... 34
3.6.1 PCM timing ..... 34
3.6.2 PCM Application Guide ..... 36
3.7 SD Interface ..... 36
3.8 I2C Interface ..... 37
3.9 SDIO Interface ..... 38
3.10 SPI Interface ..... 38
3.11 Network status ..... 38
3.12 Flight Mode Control ..... 39
3.13 Other interface ..... 40
3.13.1 Sink Current Source ..... 40
3.13.2 ADC ..... 41

3.13.3 LDO ....41

**4 RF Specifications ....42**

4.1 GSM/UMTS/LTE RF Specifications ....42

4.2 GSM /UMTS/LTE Antenna Design Guide ....44

4.3 GNSS ....45

4.3.1 GNSS Technical specification ....45

4.3.2 GNSS Application Guide ....46

**5 Electrical Specifications ....48**

5.1 Absolute maximum ratings ....48

5.2 Operating conditions ....48

5.3 Operating Mode ....49

5.3.1 Operating Mode Definition ....49

5.3.2 Sleep mode ....50

5.3.3 Minimum functionality mode and Flight mode ....50

5.4 Current Consumption ....51

5.5 ESD Notes ....52

**6 SMT Production Guide ....53**

6.1 Top and Bottom View of MODULE ....53

6.2 Label Information ....54

6.3 Typical SMT Reflow Profile ....54

6.4 Moisture Sensitivity Level (MSL) ....55

6.5 Stencil Foil Design Recommendation ....56

**7 Packaging ....57**

**Appendix ....59**

A. Reference Design ....59

B. Coding Schemes and Maximum Net Data Rates over Air Interface ....60

C. Related Documents ....62

D. Terms and Abbreviations ....64

E. Safety Caution ....66

# Table Index

Table 1: Module frequency bands ..... 9
Table 2: General features ..... 12
Table 3: Pin definition ..... 15
Table 4: IO parameters definition ..... 16
Table 5: Pin description ..... 16
Table 6: VBAT pins electronic characteristic ..... 22
Table 7: Recommended Zener diode list ..... 23
Table 8: Power on timing and electronic characteristic ..... 26
Table 9: Power off timing and electronic characteristic ..... 27
Table 10: RESET pin electronic characteristic ..... 28
Table 11: USIM electronic characteristic in 1.8V mode (USIM_VDD=1.8V) ..... 31
Table 12: USIM electronic characteristic 3.0V mode (USIM_VDD=2.95V) ..... 31
Table 13: Amphenol USIM socket pin description ..... 33
Table 14: PCM format ..... 34
Table 15: PCM timing parameters ..... 35
Table 16: MMC/SD electronic characteristic (SD_DATA0-SD_DATA3，SD_CLK and SD_CMD) * ..... 36
Table 17: NETLIGHT pin status ..... 39
Table 18: FLIGHTMODE pin status ..... 39
Table 19: Sink current electronic characteristic ..... 40
Table 20: ADC1 and ADC2 electronic characteristics ..... 41
Table 21: Electronic characteristic ..... 41
Table 22: Conducted transmission power ..... 42
Table 23: Operating frequencies ..... 42
Table 24: E-UTRA operating bands ..... 43
Table 25: Conducted receive sensitivity ..... 43
Table 26: Reference sensitivity (QPSK) ..... 43
Table 27: Trace loss ..... 44
Table 28: Recommended TVS ..... 45
Table 29: Absolute maximum ratings ..... 48
Table 30: Recommended operating ratings ..... 48
Table 31: 1.8V Digital I/O characteristics* ..... 48
Table 32: Operating temperature ..... 49
Table 33: Operating mode Definition ..... 49
Table 34: Current consumption on VBAT Pins (VBAT=3.8V) ..... 51
Table 35: The ESD performance measurement table (Temperature: 25℃, Humidity: 45%) ..... 52
Table 36: The description of label information ..... 54
Table 37: Moisture Sensitivity Level and Floor Life ..... 55
Table 38: Tray size ..... 58
Table 39: Small Carton size ..... 58
Table 40: Big Carton size ..... 58
Table 41: Coding Schemes and Maximum Net Data Rates over Air Interface ..... 60
Table 42: Related Documents ..... 62
Table 43: Terms and Abbreviations ..... 64

Table 44: Safety Caution ..... 66

# Figure Index

Figure 1: MODULE block diagram ..... 11
Figure 2: Pin assignment overview ..... 14
Figure 3: Dimensions (Unit: mm) ..... 20
Figure 4: Footprint recommendation (Unit: mm) ..... 21
Figure 5: VBAT voltage drop during burst emission (GSM/GPRS) ..... 22
Figure 6: Power supply application circuit ..... 23
Figure 7: Linear regulator reference circuit ..... 24
Figure 8: Switching mode power supply reference circuit ..... 24
Figure 9: Reference power on/off circuit ..... 25
Figure 10: Power on timing sequence ..... 25
Figure 11: Power off timing sequence ..... 27
Figure 12: Reference reset circuit ..... 27
Figure 13: UART full modem ..... 28
Figure 14: UART null modem ..... 28
Figure 15: Reference circuit of level shift ..... 29
Figure 16: RI behaviour（SMS and URC report） ..... 29
Figure 17: RI behaviour（voice call） ..... 30
Figure 18: USB reference circuit ..... 30
Figure 19: USIM interface reference circuit ..... 32
Figure 20: Amphenol SIM card socket ..... 33
Figure 21: PCM_SYNC timing ..... 34
Figure 22: EXT codec to MODULE timing ..... 34
Figure 23: Module to EXT codec timing ..... 35
Figure 24: Audio codec reference circuit ..... 36
Figure 25: SD reference circuit ..... 37
Figure 26: I2C reference circuit ..... 37
Figure 27: NETLIGHT reference circuit ..... 38
Figure 28: Flight mode switch reference circuit ..... 39
Figure 29: ISINK reference circuit ..... 40
Figure 30: Antenna matching circuit (MAIN_ANT) ..... 44
Figure 31: Antenna matching circuit (AUX_ANT) ..... 45
Figure 32: Active antenna circuit ..... 46
Figure 33: Passive antenna circuit (Default) ..... 46
Figure 34: Top and bottom view of MODULE ..... 53
Figure 35: Label information ..... 54
Figure 36: The ramp-soak-spike reflow profile of MODULE ..... 55
Figure 37: packaging diagram ..... 57
Figure 38: Tray drawing ..... 57
Figure 39: Small carton drawing ..... 58
Figure 40: Big carton drawing ..... 58
Figure 41: Reference design ..... 59

# Revision History

| Data | Version | Description of change | Author |
|---|---|---|---|
| 2017-10-11 | 1.00 | Original | Ma Honggang<br>Gao Fan |
| 2017-11-23 | 1.01 | Modify Table2,Table15,Table 8,Table16, Table21, Table 26<br>Modify Figure 4,Figure 10<br>Modify 3.13.3 LDO output voltage 2.85V by default.<br>Rename VDD_EXT to VDD_AUX | Gao Fan<br>Yuan Shijie |
| 2022-11-03 | 1.02 | Update uart rate. | Liu Wang Rong |

# 1 Introduction

This document describes the electronic specifications, RF specifications, interfaces, mechanical characteristics and testing results of the SIMCom MODULE. With the help of this document and other software application notes/user guides, users can understand and use MODULE to design and develop applications quickly.

## 1.1 Product Outline

Aimed at the global market, the MODULE support GSM, WCDMA, LTE-TDD and LTE-FDD. Users can choose the MODULE according to the wireless network configuration. The supported radio frequency bands are described in the following table.

**Table 1: Module frequency bands**

| Standard | Frequency | Module | |
|---|---|---|---|
| | | SIM7600E | SIM7600E-H |
| GSM | EGSM 900MHz | ✓ | ✓ |
| | DCS1800MHz | ✓ | ✓ |
| WCDMA | BAND1 | ✓ | ✓ |
| | BAND5 | ✓ | ✓ |
| | BAND8 | ✓ | ✓ |
| LTE-FDD | LTE-FDD B1 | ✓ | ✓ |
| | LTE-FDD B3 | ✓ | ✓ |
| | LTE-FDD B5 | ✓ | ✓ |
| | LTE-FDD B7 | ✓ | ✓ |
| | LTE-FDD B8 | ✓ | ✓ |
| | LTE-FDD B20 | ✓ | ✓ |
| LTE-TDD | LTE TDD B38 | ✓ | ✓ |
| | LTE TDD B40 | ✓ | ✓ |
| | LTE TDD B41 | ✓ | ✓ |
| Category | | CAT1 | CAT4 |
| GNSS | | ✓ | ✓ |

With a small physical dimension of 30*30*2.9 mm and with the functions integrated, the MODULE can meet almost any space requirement in users' applications, such as smart phone,

PDA, industrial handheld, machine-to-machine and vehicle application, etc.

## 1.2 Hardware Interface Overview

The interfaces are described in detail in the next chapters include:

- **Power Supply**
- **USB Interface**
- **UART Interface**
- **MMC/SD Interface**
- **SDIO Interface**
- **USIM Interface**
- **GPIO**
- **ADC**
- **LDO Power Output**
- **Current Sink Source**
- **PCM Interface**
- **SPI Interface**
- **I2C Interface**

## 1.3 Hardware Block Diagram

The block diagram of the MODULE is shown in the figure below.

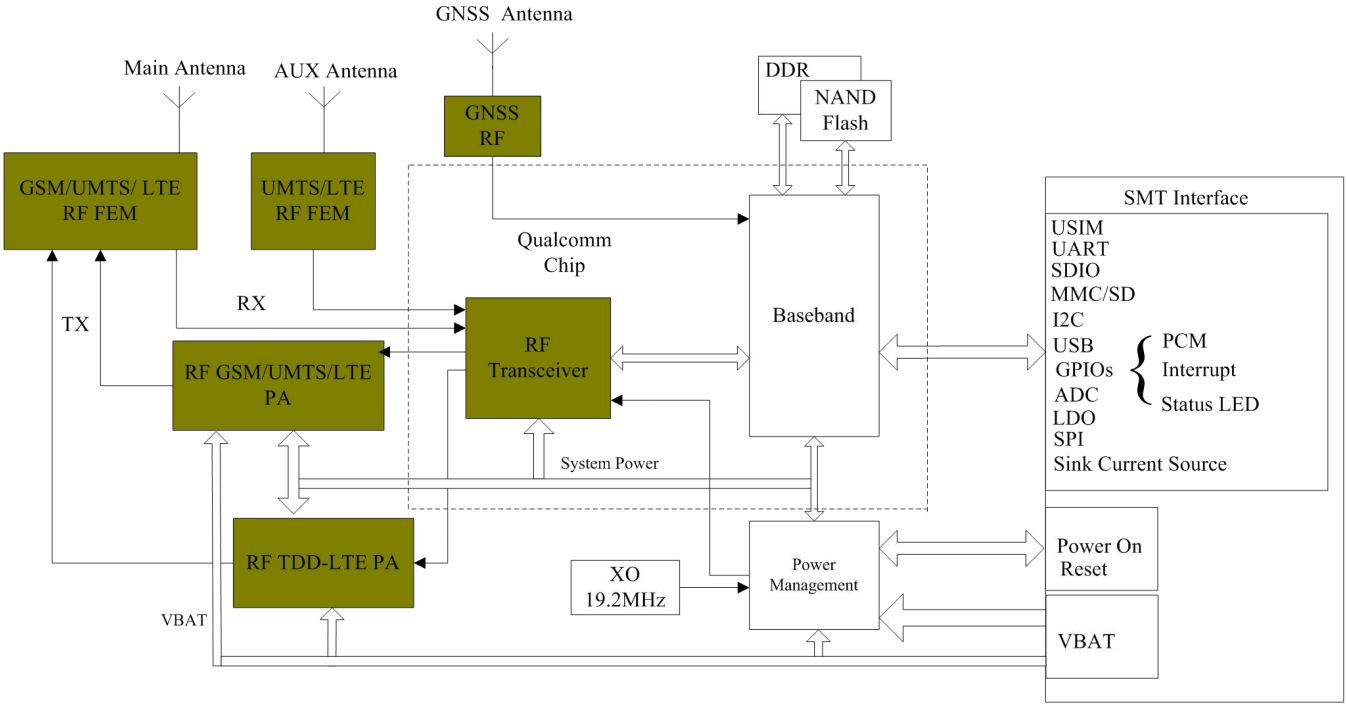


**Figure 1: MODULE block diagram**

## 1.4 Functional Overview

**Table 2: General features**

| Feature | Implementation |
|---|---|
| Power supply | Single supply voltage 3.4～4.2V |
| Power saving | Current in sleep mode : <5mA |
| Radio frequency bands | Please refer to the table 1 |
| Transmitting power | GSM/GPRS power class:<br>--EGSM900: 4 (2W)<br>--DCS1800: 1 (1W)<br>EDGE power class:<br>--EGSM900: E2 (0.5W)<br>--DCS1800: E1 (0.4W)<br>UMTS power class:<br>--WCDMA :3 (0.25W)<br>LTE power class: 3 (0.25W) |
| Data Transmission Throughput | GPRS multi-slot class 12<br>EDGE multi-slot class 12<br>UMTS R99 speed: 384 kbps DL/UL<br>HSPA+: 5.76 Mbps(UL), 42 Mbps(DL)<br>TD-HSDPA/HSUPA: 2.2 Mbps(UL), 2.8 Mbps(DL)<br>LTE CAT 1: 10 Mbps(DL)<br>LTE CAT 1: 5 Mbps(DL)<br>LTE CAT 4 ： 150 Mbps (DL)<br>LTE CAT 4 ： 50 Mbps (UL) |
| Antenna | GSM/UMTS/LTE main antenna.<br>UMTS/LTE auxiliary antenna<br>GNSS antenna |
| GNSS | GNSS engine (GPS,GLONASS and BD)<br>Protocol: NMEA |
| SMS | MT, MO, CB, Text and PDU mode<br>SMS storage: USIM card or ME(default)<br>Transmission of SMS alternatively over CS or PS. |
| USIM interface | Support identity card: 1.8V/ 3V |
| USIM application toolkit | Support SAT class 3, GSM 11.14 Release 98<br>Support USAT |
| Phonebook management | Support phonebook types: DC,MC,RC,SM,ME,FD,ON,LD,EN |
| Audio feature | Support PCM interface<br>Only support PCM master mode and short frame sync, 16-bit linear data formats |
| UART interface | A full modem serial port by default<br>Baud rate: 300bps to 3.6Mbps(default:115200bps)<br>Autobauding baud rate: 9600,19200,38400,57600,115200bps |

| | |
|---|---|
| | Can be used as the AT commands or data stream channel<br>Support RTS/CTS hardware handshake<br>Multiplex ability according to GSM 07.10 Multiplexer Protocol |
| MMC/SD | Support MMC and SD cards with 2.85 V on SD port |
| SDIO | Support SDIO with 1.8 V only on SDIO port |
| USB | USB 2.0 high speed interface |
| Firmware upgrade | Firmware upgrade over USB interface or FOTA |
| Physical characteristics | Size:30*30*2.9m<br>Weight:5.7 g |
| Temperature range | Normal operation temperature: -30°C to +80°C<br>Extended operation temperature: -40°C to +85°C*<br>Storage temperature -45°C to +90°C |

***Note: Module is able to make and receive voice calls, data calls, SMS and make GPRS/UMTS/HSPA+/LTE traffic in -40℃ ~ +85℃. The performance will be reduced slightly from the 3GPP specifications if the temperature is outside the normal operating temperature range and still within the extreme operating temperature range.***

# 2 Package Information

## 2.1 Pin Assignment Overview

All functions of the MODULE will be provided through 87 pads that will be connected to the customers' platform. The following Figure is a high-level view of the pin assignment of the MODULE.

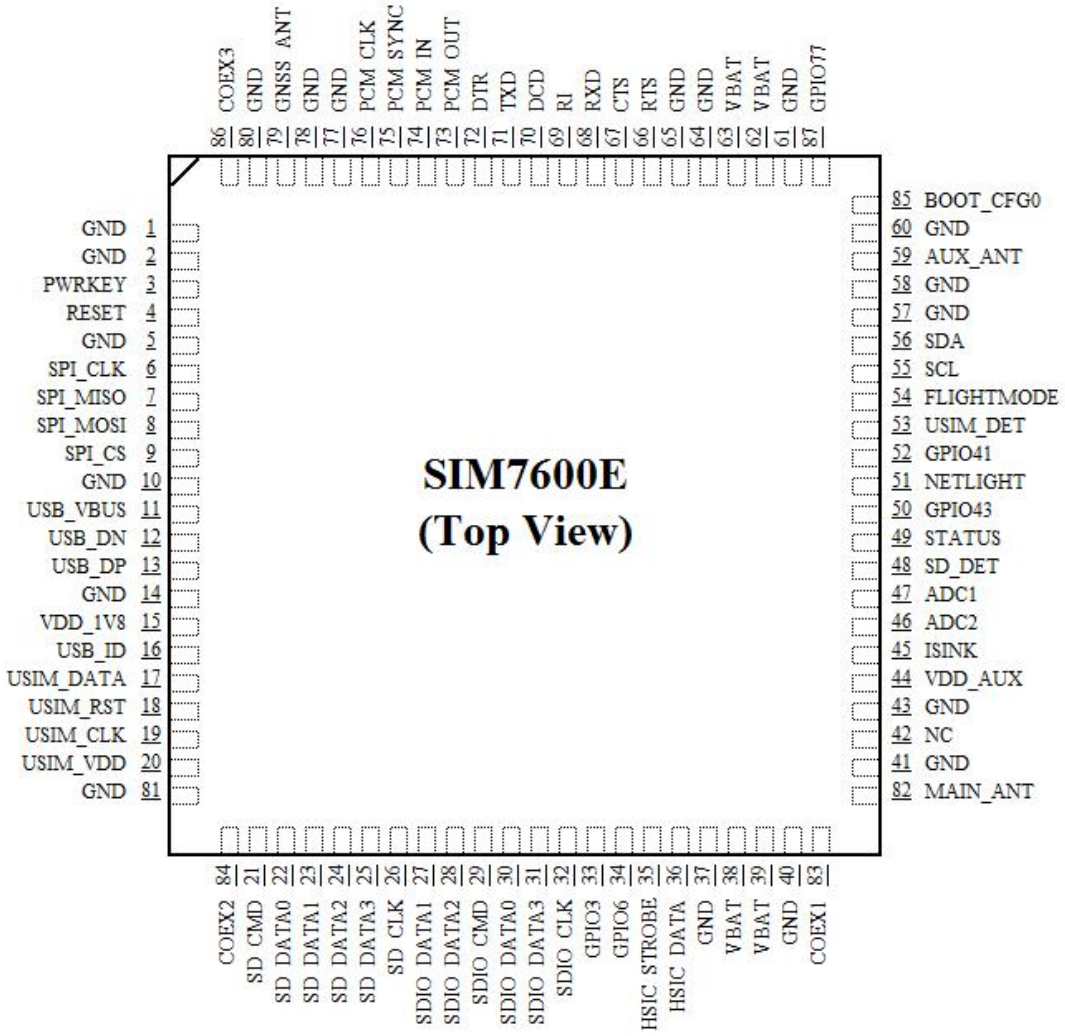


**Figure 2: Pin assignment overview**

**Table 3: Pin definition**

| Pin No. | Pin name | Pin No. | Pin name |
|---|---|---|---|
| 1 | GND | 2 | GND |
| 3 | PWRKEY | 4 | RESET |
| 5 | GND | 6 | SPI_CLK |
| 7 | SPI_MISO | 8 | SPI_MOSI |
| 9 | SPI_CS | 10 | GND |
| 11 | USB_VBUS | 12 | USB_DN |
| 13 | USB_DP | 14 | GND |
| 15 | VDD_1V8 | 16 | USB_ID |
| 17 | USIM_DATA | 18 | USIM_RST |
| 19 | USIM_CLK | 20 | USIM_VDD |
| 21 | SD_CMD | 22 | SD_DATA0 |
| 23 | SD_DATA1 | 24 | SD_DATA2 |
| 25 | SD_DATA3 | 26 | SD_CLK |
| 27 | SDIO_DATA1 | 28 | SDIO_DATA2 |
| 29 | SDIO_CMD | 30 | SDIO_DATA0 |
| 31 | SDIO_DATA3 | 32 | SDIO_CLK |
| 33 | GPIO3 | 34 | GPIO6 |
| 35 | HSIC_STROBE | 36 | HSIC_DATA |
| 37 | GND | 38 | VBAT |
| 39 | VBAT | 40 | GND |
| 41 | GND | 42 | NC (RESERVED) |
| 43 | GND | 44 | VDD_AUX |
| 45 | ISINK | 46 | ADC2 |
| 47 | ADC1 | 48 | SD_DET |
| 49 | STATUS | 50 | GPIO43* |
| 51 | NETLIGHT | 52 | GPIO41 |
| 53 | USIM_DET | 54 | FLIGHTMODE |
| 55 | SCL | 56 | SDA |
| 57 | GND | 58 | GND |
| 59 | AUX_ANT | 60 | GND |
| 61 | GND | 62 | VBAT |
| 63 | VBAT | 64 | GND |
| 65 | GND | 66 | RTS |
| 67 | CTS | 68 | RXD |

| | | | |
|---|---|---|---|
| 69 | RI | 70 | DCD |
| 71 | TXD | 72 | DTR |
| 73 | PCM_OUT | 74 | PCM_IN |
| 75 | PCM_SYNC | 76 | PCM_CLK |
| 77 | GND | 78 | GND |
| 79 | GNSS_ANT | 80 | GND |
| 81 | GND | 82 | MAIN_ANT |
| 83 | COEX1* | 84 | COEX2 |
| 85 | BOOT_CFG0* | 86 | COEX3* |
| 87 | GPIO77 | | |

***NOTE: Before the normal power up, GPIO43，COEX1, COEX3 and BOOT_CFG0 cannot be pulled up.***

## 2.2 Pin Description

**Table 4: IO parameters definition**

| Pin type | Description |
|---|---|
| PI | Power input |
| PO | Power output |
| AI | Analog input |
| AIO | Analog input/output |
| I/O | Bidirectional input /output |
| DI | Digital input |
| DO | Digital output |
| DOH | Digital output with high level |
| DOL | Digital output with low level |
| PU | Pull up |
| PD | Pull down |

**Table 5: Pin description**

| Pin name | Pin No. | Default status | Description | Comment |
|---|---|---|---|---|
| **Power supply** | | | | |
| VBAT | 38,39, 62,63 | PI | Power supply, voltage range: 3.4～4.2V. | |
| VDD_AUX | 44 | PO | LDO power output for other external circuits with Max 150mA current output. Its output voltage is 2.85V by default.（The voltage can be configured from 1.7V to 3.05V by AT command）. | If unused, keep it open. |

| | | | | |
|---|---|---|---|---|
| VDD_1V8 | 15 | PO | 1.8 output with Max 50mA current output for external circuit, such as level shift circuit. | If unused, keep it open. |
| GND | 1,2,5, 10,14,37 ,40,41,4 3,57,58, 60,61,64 ,65,77,7 8,80,81 | | Ground | |
| **System Control** | | | | |
| PWRKEY | 3 | DI,PU | System power on/off control input, active low. | The high voltage is 0.8V; |
| RESET | 4 | DI, PU | System reset control input, active low. | RESET has been pulled up to 1.8V via 40Kohm resistor internally. |
| **SD interface** | | | | |
| SD_CMD | 21 | DO | SDIO command | If unused, keep them open. |
| SD_DATA0 | 22 | I/O | SDIO data | |
| SD_DATA1 | 23 | I/O | | |
| SD_DATA2 | 24 | I/O | | |
| SD_DATA3 | 25 | I/O | | |
| SD_CLK | 26 | DO | SDIO clock | |
| **USIM interface** | | | | |
| USIM_DATA | 17 | I/O,PU | USIM Card data I/O, which has been pulled up via a 10KR resistor to USIM_VDD internally. Do not pull it up or down externally. | All lines of USIM interface should be protected against ESD. |
| USIM_RST | 18 | DO | USIM Reset | |
| USIM_CLK | 19 | DO | USIM clock | |
| USIM_VDD | 20 | PO | Power output for USIM card, its output Voltage depends on USIM card type automatically. Its output current is up to 50mA. | |
| **SPI interface** | | | | |
| SPI_CLK | 6 | DO | SPI clock output | This function is not supported yet . If unused, please keep them open. |
| SPI_MISO | 7 | DI | SPI master in/slave out data | |
| SPI_MOSI | 8 | DO | SPI master out/slave in data | |
| SPI_CS | 9 | DO | SPI chip-select output | |
| **USB** | | | | |

| | | | | |
|---|---|---|---|---|
| USB_VBUS | 11 | DI,PD | Valid USB detection input with 3.0~5.25V detection voltage | |
| USB_DN | 12 | I/O | Negative line of the differential, bi-directional USB signal. | |
| USB_DP | 13 | I/O | Positive line of the differential, bi-directional USB signal. | |
| USB_ID | 16 | DI | High-speed USB ID input | Keep it open. |
| **UART interface** | | | | |
| RTS | 66 | DOH | Request to send | If unused, keep them open. |
| CTS | 67 | DI,PU | Clear to Send | |
| RXD | 68 | DI,PU | Receive Data | |
| RI | 69 | DOH | Ring Indicator | |
| DCD | 70 | DOH | Carrier detects | |
| TXD | 71 | DOH | Transmit Data | |
| DTR | 72 | DI,PU | DTE get ready | |
| **I2C interface** | | | | |
| SCL | 55 | DO | I2C clock output | If unused, keep open, or else pull them up via 4.7KΩ resistors to 1.8V. |
| SDA | 56 | I/O | I2C data input/output | |
| **SDIO interface** | | | | |
| SDIO_DATA1 | 27 | I/O | SDIO data1 | For WLAN solution |
| SDIO_DATA2 | 28 | I/O | SDIO data2 | |
| SDIO_CMD | 29 | DO | SDIO command | |
| SDIO_DATA0 | 30 | I/O | SDIO data0 | |
| SDIO_DATA3 | 31 | I/O | SDIO data3 | |
| SDIO_CLK | 32 | DO | SDIO clock | |
| **HSIC interface** | | | | |
| HSIC_STROBE | 35 | DO | HSIC strobe wakeup | Reserved |
| HSIC_DATA | 36 | I/O | HSIC data | |
| **PCM interface** | | | | |
| PCM_OUT | 73 | DO | PCM data output. | If unused, please keep them open. |
| PCM_IN | 74 | DI | PCM data input. | |
| PCM_SYNC | 75 | DO | PCM data frame sync signal. | |
| PCM_CLK | 76 | DO | PCM data bit clock. | |
| **GPIO** | | | | |
| NETLIGHT | 51 | DO | LED control output as network status indication. | If unused, keep them open. |
| FLIGHTMODE | 54 | DI,PU | Flight Mode control input.<br>High level(or open): Normal Mode<br>Low level: Flight Mode | ***DO NOT PULL UP GPIO43 DURING NORMAL POWER UP!*** |

| | | | | |
|---|---|---|---|---|
| STATUS | 49 | DO | Operating status output.<br>High level: Power on and firmware ready<br>Low level: Power off | |
| GPIO41 | 52 | IO | GPIO | |
| GPIO43 | 50 | IO | GPIO | |
| GPIO3 | 33 | IO | GPIO | |
| GPIO6 | 34 | IO | GPIO | |
| SD_DET | 48 | IO | Default: GPIO<br>Optional: SD card detecting input.<br>H: SD card is removed<br>L: SD card is inserted | |
| USIM_DET | 53 | IO | Default: GPIO<br>Optional: USIM card detecting input.<br>H: USIM is removed<br>L: USIM is inserted | |
| GPIO77 | 87 | IO | GPIO | |
| **RF interface** | | | | |
| MAIN _ANT | 82 | AIO | MAIN antenna soldering pad | |
| GNSS_ANT | 79 | AI | GNSS antenna soldering pad | |
| AUX_ANT | 59 | AI | Auxiliary antenna soldering pad | |
| **Other interface** | | | | |
| ISINK | 45 | PI | Ground-referenced current sink. | If unused, please keep them open. |
| ADC1 | 47 | AI | Analog-digital converter input 1 | |
| ADC2 | 46 | AI | Analog-digital converter input 2 | |
| COEX1 | 83 | I/O | RF synchronizing between Wi-Fi and LTE. | If unused, keep them open.<br>***DO NOT PULL UP COEX1 AND COEX2 DURING NORMAL POWER UP!*** |
| COEX2 | 84 | I/O | | |
| COEX3 | 86 | I/O | | |
| BOOT_CFG0 | 85 | DI,PD | Boot configuration input. Module will be forced into USB download mode by connect 85 pin to VDD_1V8 during power up. | Do place 2 test points for debug.<br>***DO NOT PULL UP BOOT_CFG0 DURING NORMAL POWER UP!*** |
| NC | 42 | | No connection. | Keep it open |

## 2.3 Mechanical Information

The following figure shows the package outline drawing of MODULE.

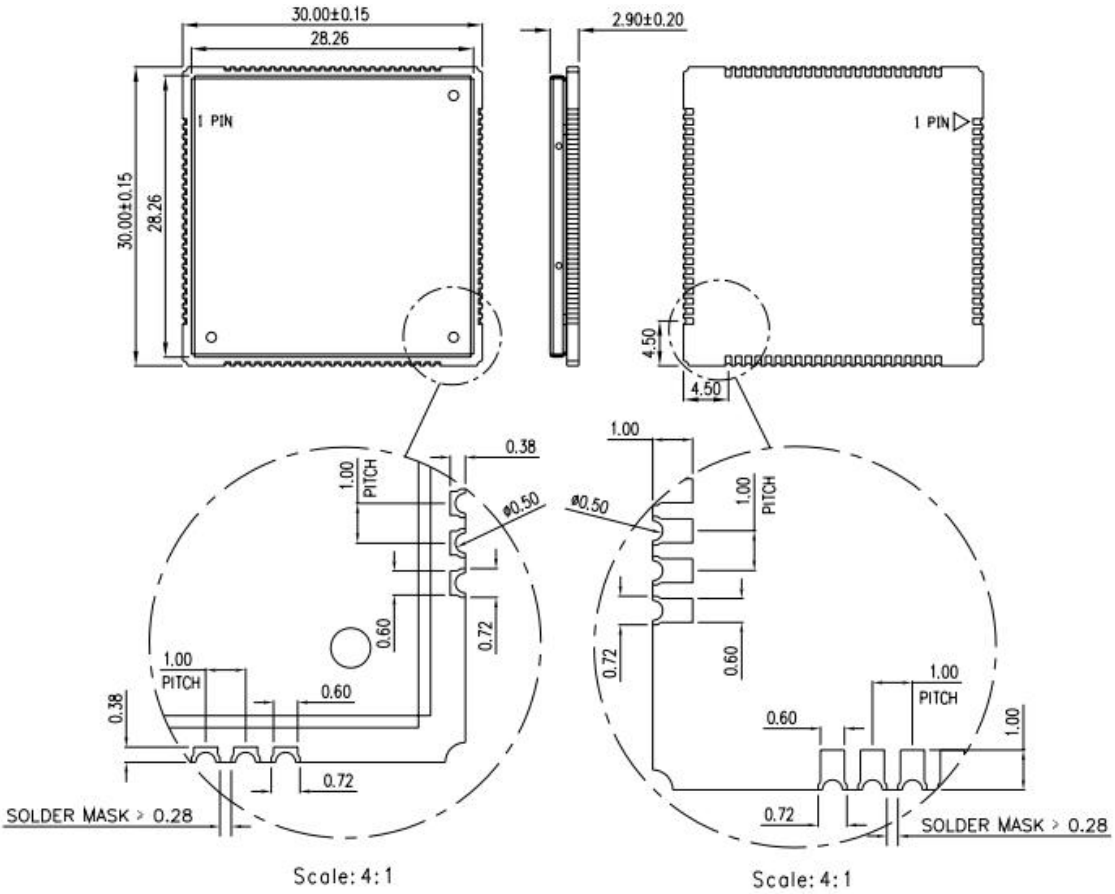


**Figure 3: Dimensions (Unit: mm)**

## 2.4 Footprint Recommendation

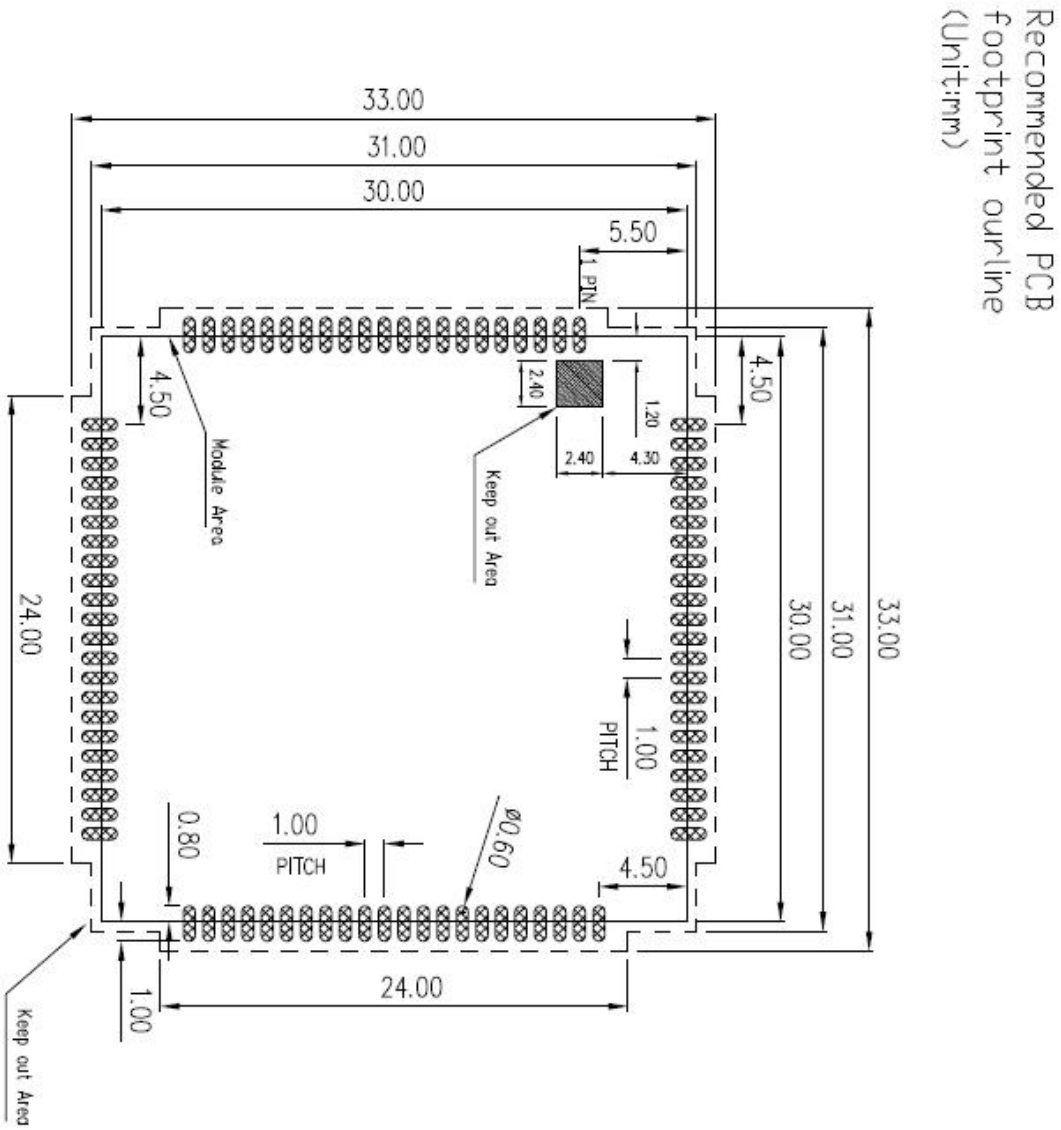


**Figure 4: Footprint recommendation (Unit: mm)**

# 3 Interface Application

## 3.1 Power Supply

The power supply pins of MODULE include 4 pins (pin 62&63, pin 38&39) named VBAT.
The 4 VBAT pads supply the power to RF and baseband circuits directly. On VBAT pads, the ripple current up to 2A typically, due to GSM/GPRS emission burst (every 4.615ms), may cause voltage drop. So the power supply for these pads must be able to provide sufficient current up to more than 2A in order to avoid the voltage drop is more than 300mV.
The following figure shows the VBAT voltage ripple wave at the maximum power transmit phase.

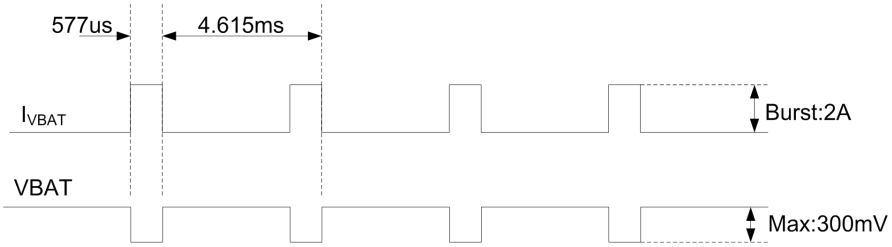


**Figure 5: VBAT voltage drop during burst emission (GSM/GPRS)**

***Note: The test condition: The voltage of power supply for VBAT is 3.8V, Cd=100 µF tantalum capacitor (ESR=0.7Ω) and Cf=100nF (Please refer to Figure 6—Application circuit).***

**Table 6: VBAT pins electronic characteristic**

| Symbol | Description | Min. | Typ. | Max. | Unit |
|---|---|---|---|---|---|
| VBAT | Module power voltage | 3.4 | 3.8 | 4.2 | V |
| $I_{VBAT(peak)}$ | Module power peak current in normal mode. | - | 2 | - | A |
| $I_{VBAT(average)}$ | Module power average current in normal mode | Please refer to the table 34 | | | |
| $I_{VBAT(sleep)}$ | Power supply current in sleep mode | | | | |
| $I_{VBAT(power-off)}$ | Module power current in power off mode. | - | - | 20 | uA |

### 3.1.1 Power Supply Design Guide

Make sure that the voltage on the VBAT pins will never drop below 3.4V, even during a transmit burst, when current consumption may rise up to 2A. If the voltage drops below 3.4V, the RF performance may be affected.

***Note: If the power supply for VBAT pins can support up to 2A, using a total of more than 300uF capacitors is recommended, or else users must using a total of 1000uF capacitors typically, in order to avoid the voltage drop is more than 300mV.***

Some multi-layer ceramic chip (MLCC) capacitors (0.1/1uF) with low ESR in high frequency band can be used for EMC.

These capacitors should be put as close as possible to VBAT pads. Also, users should keep VBAT trace on circuit board wider than 2 mm to minimize PCB trace impedance. The following figure shows the recommended circuit.

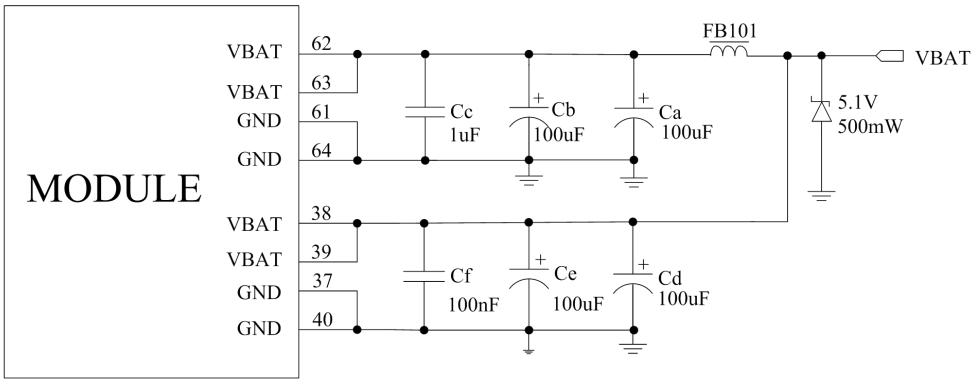


**Figure 6: Power supply application circuit**

In addition, in order to guard for over voltage protection, it is suggested to use a zener diode with 5.1V reverse zener voltage and more than 500mW power dissipation.

***Note: customer could only power pin 62, 63 or only power pin 38, 39, for these pins are connected inside the MODULE.***

**Table 7: Recommended Zener diode list**

| No. | Manufacturer | Part Number | Power dissipation | Package |
|---|---|---|---|---|
| 1 | On semi | MMSZ5231BT1G | 500mW | SOD123 |
| 2 | Prisemi | PZ3D4V2H | 500mW | SOD323 |
| 3 | Vishay | MMSZ4689-V | 500mW | SOD123 |
| 4 | Crownpo | CDZ55C5V1SM | 500mW | 0805 |

### 3.1.2 Recommended Power Supply Circuit

It is recommended that a switching mode power supply or a linear regulator power supply is used. It is important to make sure that all the components used in the power supply circuit can resist a peak current up to 2A.

The following figure shows the linear regulator reference circuit with 5V input and 3.8V output.

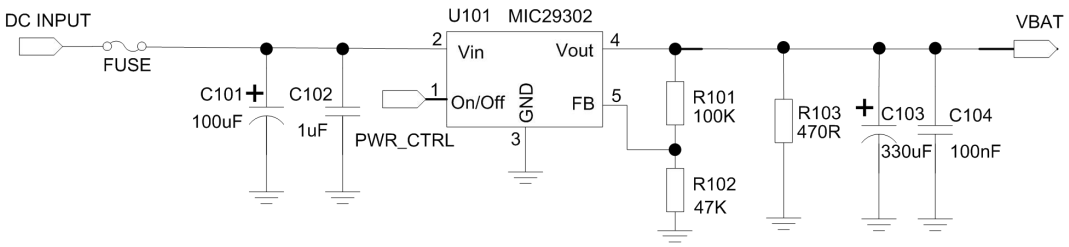


**Figure 7: Linear regulator reference circuit**

If there is a big voltage difference between input and output for VBAT power supply, or the efficiency is extremely important, then a switching mode power supply will be preferable. The following figure shows the switching mode power supply reference circuit.

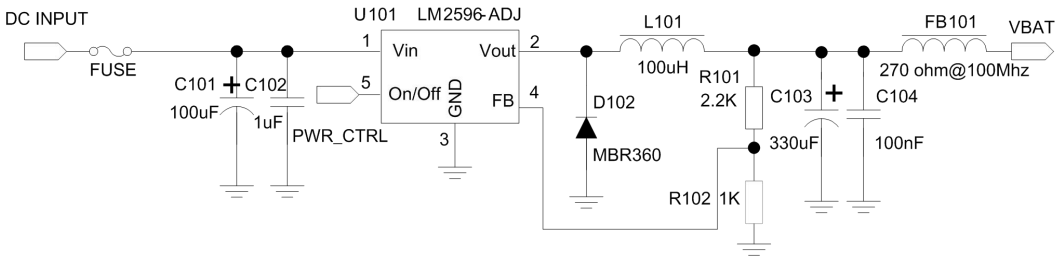


**Figure 8: Switching mode power supply reference circuit**

***Note: The Switching Mode power supply solution for VBAT must be chosen carefully against Electro Magnetic Interference and ripple current from depraving RF performance.***

### 3.1.3 Voltage Monitor

To monitor the VBAT voltage, the AT command "AT+CBC" can be used.

For monitoring the VBAT voltage outside or within a special range, the AT command "AT+CVALARM" can be used to enable the under-voltage warning function.

If users need to power off MODULE, when the VBAT voltage is out of a range, the AT command "AT+CPMVT" can be used to enable under-voltage power-off function.

***Note: Under-voltage warning function and under-voltage power-off function are disabled by default. For more information about these AT commands, please refer to Document [1].***

## 3.2 Power on/Power off/Reset Function

### 3.2.1 Power on

MODULE can be powered on by pulling the PWRKEY pin down to ground.
The PWRKEY pin has been pulled up with a diode to 1.8V internally, so it does not need to be pulled up externally. It is strongly recommended to put a100nF capacitor, an ESD protection diode, close to the PWRKEY pin as it would strongly enhance the ESD performance of PWRKEY pin. Please refer to the following figure for the recommended reference circuit.

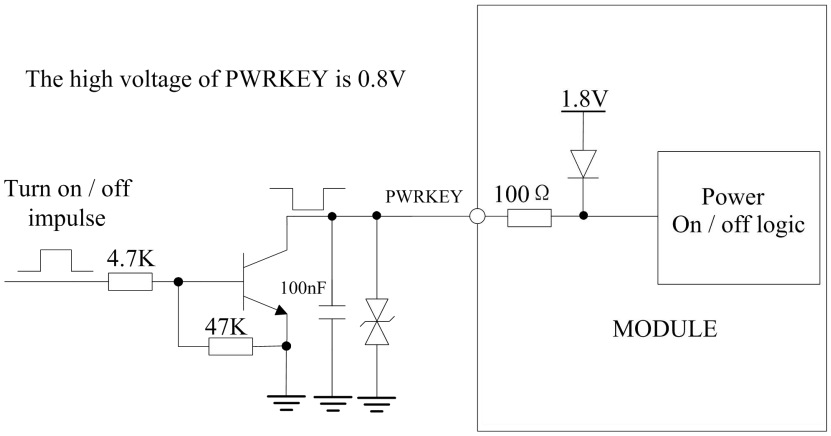


**Figure 9: Reference power on/off circuit**

***Note: Module could be automatically power on by connecting PWRKEY pin to ground via 0R resistor directly.***

The power-on scenarios are illustrated in the following figure.

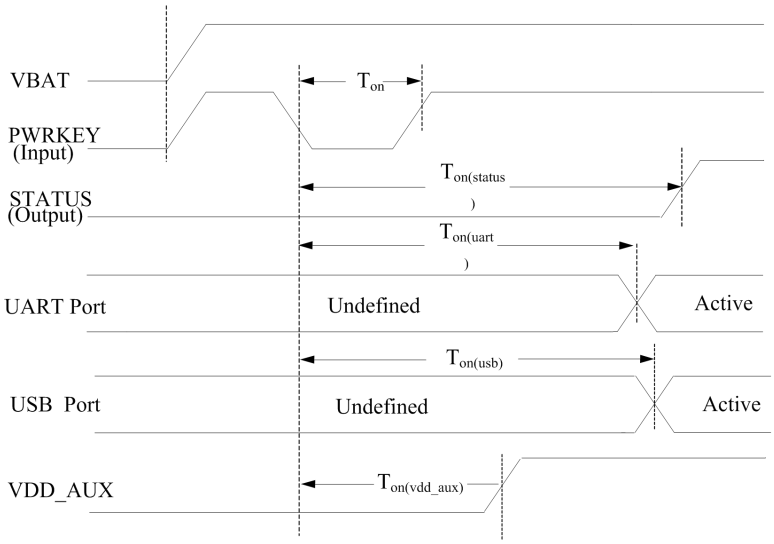


**Figure 10: Power on timing sequence**

**Table 8: Power on timing and electronic characteristic**

| Symbol | Parameter | Min. | Typ. | Max. | Unit |
|---|---|---|---|---|---|
| $T_{on}$ | The time of active low level impulse of PWRKEY pin to power on MODULE | 100 | 500 | - | ms |
| $T_{on(status)}$ | The time from power-on issue to STATUS pin output high level(indicating power up ready ) | 12 | 13 | - | s |
| $T_{on(uart)}$ | The time from power-on issue to UART port ready | 11 | 12 | - | s |
| $T_{on(vdd_aux)}$ | The time from power-on issue to VDD_AUX ready | | 2.5 | - | s |
| $T_{on(usb)}$ | The time from power-on issue to USB port ready | 11 | 12 | - | s |
| $V_{IH}$ | Input high level voltage on PWRKEY pin | 0.6 | 0.8 | 1.8 | V |
| $V_{IL}$ | Input low level voltage on PWRKEY pin | -0.3 | 0 | 0.5 | V |

### 3.2.2 Power off

The following methods can be used to power off MODULE.

- Method 1: Power off MODULE by pulling the PWRKEY pin down to ground.
- Method 2: Power off MODULE by AT command “AT+CPOF”.
- Method 3: over-voltage or under-voltage automatic power off. The voltage range can be set by AT command “AT+CPMVT”.
- Method 4: over-temperature or under-temperature automatic power off.

***Note: If the temperature is outside the range of -30~+80 ℃, some warning will be reported via AT port. If the temperature is outside the range of -40~+85 ℃, MODULE will be powered off automatically.***

***For details about “AT+CPOF” and “AT+CPMVT”, please refer to Document [1].***

These procedures will make MODULE disconnect from the network and allow the software to enter a safe state, and save data before MODULE be powered off completely.
The power off scenario by pulling down the PWRKEY pin is illustrated in the following figure.

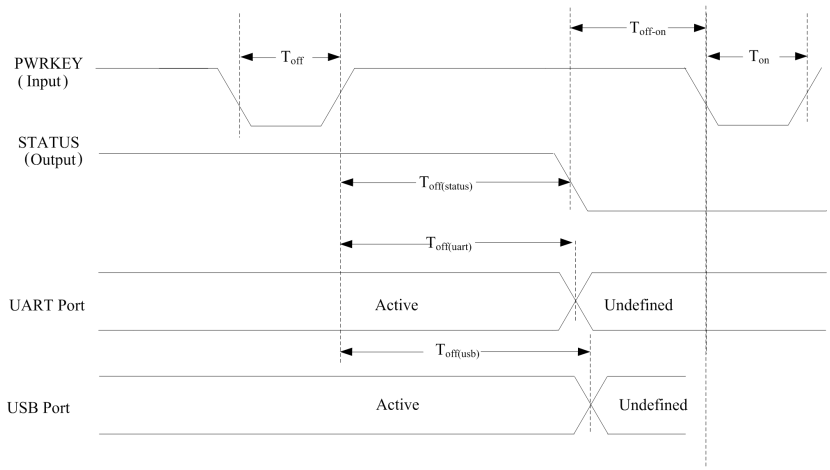

**Figure 11: Power off timing sequence**

**Table 9: Power off timing and electronic characteristic**

| Symbol | Parameter | Time value | | | Unit |
|---|---|---|---|---|---|
| | | Min. | Typ. | Max. | |
| $T_{off}$ | The active low level time pulse on PWRKEY pin to power off MODULE | 2.5 | -- | -- | s |
| $T_{off(status)}$ | The time from power-off issue to STATUS pin output low level(indicating power off )* | 25 | 26 | - | s |
| $T_{off(uart)}$ | The time from power-off issue to UART port off | 14 | 15 | - | s |
| $T_{off(usb)}$ | The time from power-off issue to USB port off | 27 | 28 | - | s |
| $T_{off-on}$ | The buffer time from power-off issue to power-on issue | 0 | - | - | s |

***Note: The STATUS pin can be used to detect whether MODULE is powered on or not. When MODULE has been powered on and firmware goes ready, STATUS will be high level, or else STATUS will still low level.***

### 3.2.3 Reset Function

MODULE can be reset by pulling the RESET pin down to ground.

***Note: This function is only used as an emergency reset, when AT command "AT+CPOF" and the PWRKEY pin all have lost efficacy.***

The RESET pin has been pulled up with a 40KΩ resistor to 1.8V internally, so it does not need to be pulled up externally. It is strongly recommended to put a100nF capacitor and an ESD protection diode close to the RESET pin. Please refer to the following figure for the recommended reference circuit.

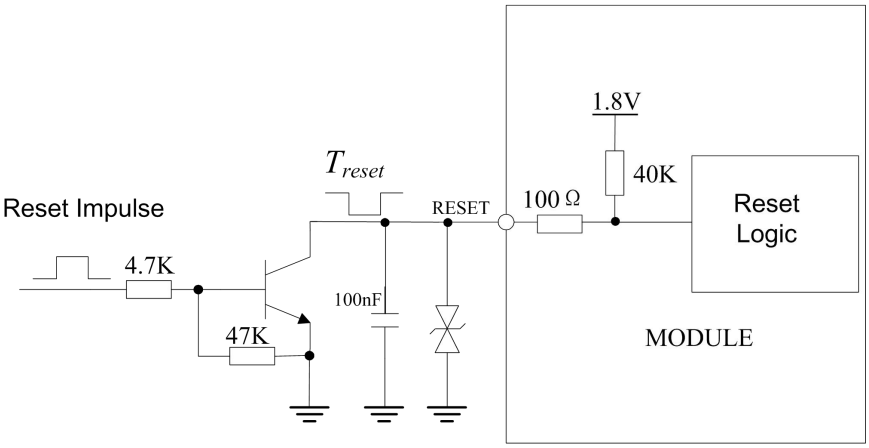


**Figure 12: Reference reset circuit**

**Table 10: RESET pin electronic characteristic**

| Symbol | Description | Min. | Typ. | Max. | Unit |
|---|---|---|---|---|---|
| $T_{reset}$ | The active low level time impulse on RESET pin to reset MODULE | 50 | 100 | 500 | ms |
| $V_{IH}$ | Input high level voltage | 1.17 | 1.8 | 2.1 | V |
| $V_{IL}$ | Input low level voltage | -0.3 | 0 | 0.8 | V |

## 3.3 UART Interface

MODULE provides a 7-wire UART (universal asynchronous serial transmission) interface as DCE (Data Communication Equipment). AT commands and data transmission can be performed through UART interface.

### 3.3.1 UART Design Guide

The following figures show the reference design.

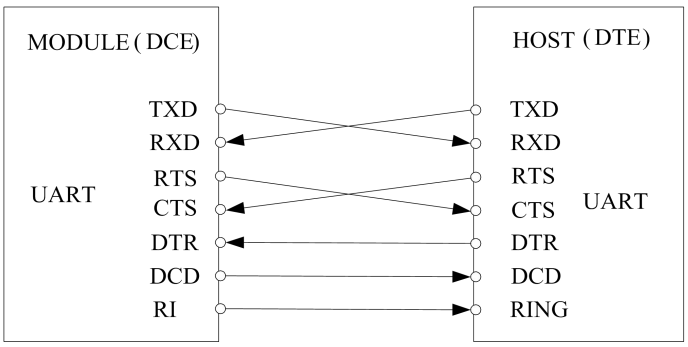


**Figure 13: UART full modem**

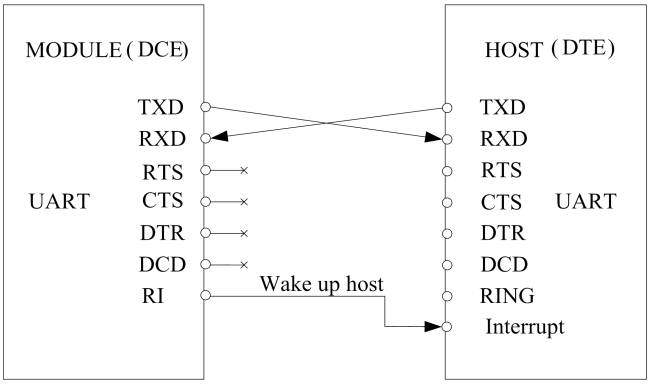


**Figure 14: UART null modem**

The MODULE UART is 1.8V voltage interface. If user's UART application circuit is 3.3V voltage interface, the level shifter circuits should be used for voltage matching. The TXB0108RGYR provided by Texas Instruments is recommended. The following figure shows the voltage matching reference design.

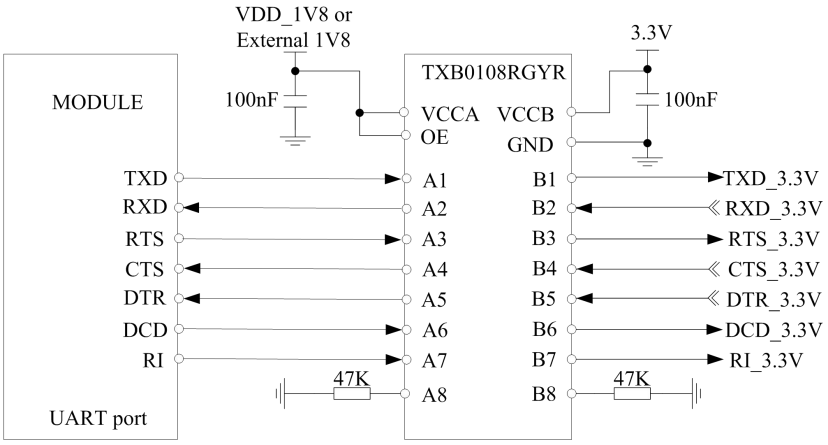


**Figure 15: Reference circuit of level shift**

To comply with RS-232-C protocol, the RS-232-C level shifter chip should be used to connect MODULE to the RS-232-C interface, for example SP3238ECA, etc.

***Note: MODULE supports the following baud rates: 300, 600, 1200, 2400, 4800, 9600, 19200, 38400, 57600, 115200, 230400, 460800, 921600, 3200000, 3686400bps. The default band rate is 115200bps.***

### 3.3.2 RI and DTR Behavior

The RI pin can be used to interrupt output signal to inform the host controller such as application CPU.

Normally RI will keep high level until certain conditions such as receiving SMS, or a URC report coming, and then it will change to low level. It will stay low until the host controller clears the interrupted event with "AT+CRIRS" AT command.

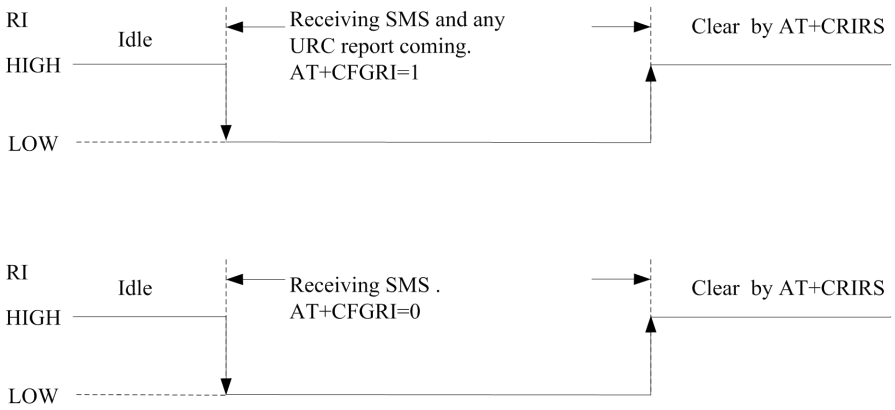


**Figure 16: RI behaviour（SMS and URC report）**

Normally RI will be kept at a high level until a voice call, then it will output periodic rectangular

wave with 5900ms low level and 100ms high level. It will output this kind of periodic rectangular wave until the call is answered or hung up.

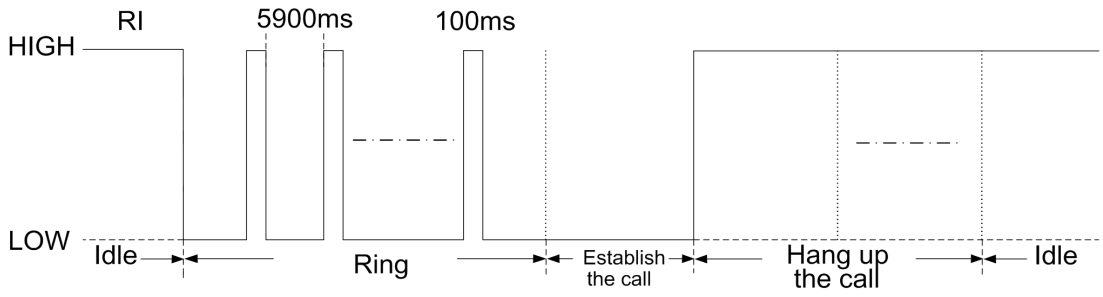


**Figure 17: RI behaviour（voice call）**

***Note: For more details of AT commands about UART, please refer to document [1] and [22].***

DTR pin can be used to wake MODULE from sleep. When MODULE enters sleep mode, pulling down DTR can wake MODULE.

## 3.4 USB Interface

The MODULE contains a USB interface compliant with the USB2.0 specification as a peripheral, but the USB charging function is not supported.

MODULE can be used as a USB device. MODULE supports the USB suspend and resume mechanism which can reduce power consumption. If there is no data transmission on the USB bus, MODULE will enter suspend mode automatically, and will be resumed by some events such as voice call, receiving SMS, etc.

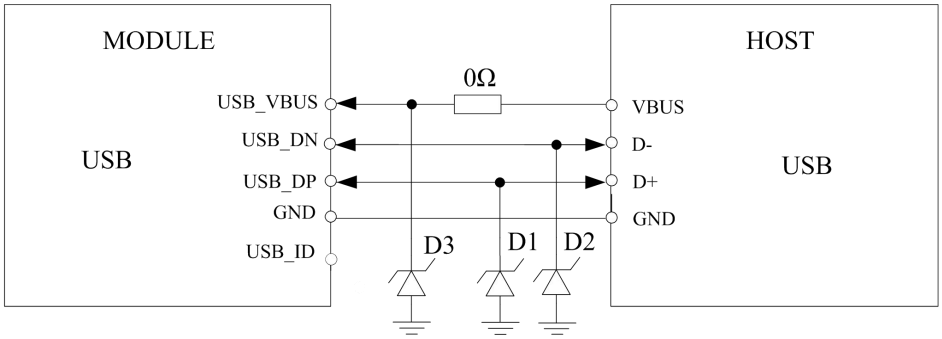


**Figure 18: USB reference circuit**

Because of the high bit rate on USB bus, more attention should be paid to the influence of the junction capacitance of the ESD component on USB data lines. Typically, the capacitance should be less than 1pF. It is recommended to use an ESD protection component such as ESD9L5.0ST5G provided by On Semiconductor (www.onsemi.com ).

D3 is suggested to select the diode with anti-ESD and voltage surge function, or customer could add a ZENER diode for surge clamping. The recommend diodes please refer to table 7.

***Note：The USB_DN and USB_DP nets must be traced by 90Ohm+/-10% differential impedance.***

## 3.5 USIM Interface

MODULE supports both 1.8V and 3.0V USIM Cards.

**Table 11: USIM electronic characteristic in 1.8V mode (USIM_VDD=1.8V)**

| Symbol | Parameter | Min. | Typ. | Max. | Unit |
|---|---|---|---|---|---|
| USIM_VDD | LDO power output voltage | 1.75 | 1.8 | 1.95 | V |
| $V_{IH}$ | High-level input voltage | 0.65*USIM_VDD | - | USIM_VDD +0.3 | V |
| $V_{IL}$ | Low-level input voltage | -0.3 | 0 | 0.35*USIM_VDD | V |
| $V_{OH}$ | High-level output voltage | USIM_VDD -0.45 | - | USIM_VDD | V |
| $V_{OL}$ | Low-level output voltage | 0 | 0 | 0.45 | V |

**Table 12: USIM electronic characteristic 3.0V mode (USIM_VDD=2.95V)**

| Symbol | Parameter | Min. | Typ. | Max. | Unit |
|---|---|---|---|---|---|
| USIM_VDD | LDO power output voltage | 2.75 | 2.95 | 3.05 | V |
| $V_{IH}$ | High-level input voltage | 0.65*USIM_VDD | - | USIM_VDD +0.3 | V |
| $V_{IL}$ | Low-level input voltage | -0.3 | 0 | 0.25*USIM_VDD | V |
| $V_{OH}$ | High-level output voltage | USIM_VDD -0.45 | - | USIM_VDD | V |
| $V_{OL}$ | Low-level output voltage | 0 | 0 | 0.45 | V |

### 3.5.1 USIM Application Guide

It is recommended to use an ESD protection component such as ESDA6V1W5 produced by ST (www.st.com ) or SMF15C produced by ON SEMI (www.onsemi.com ). Note that the USIM peripheral circuit should be close to the USIM card socket. The following figure shows the 6-pin SIM card holder reference circuit.

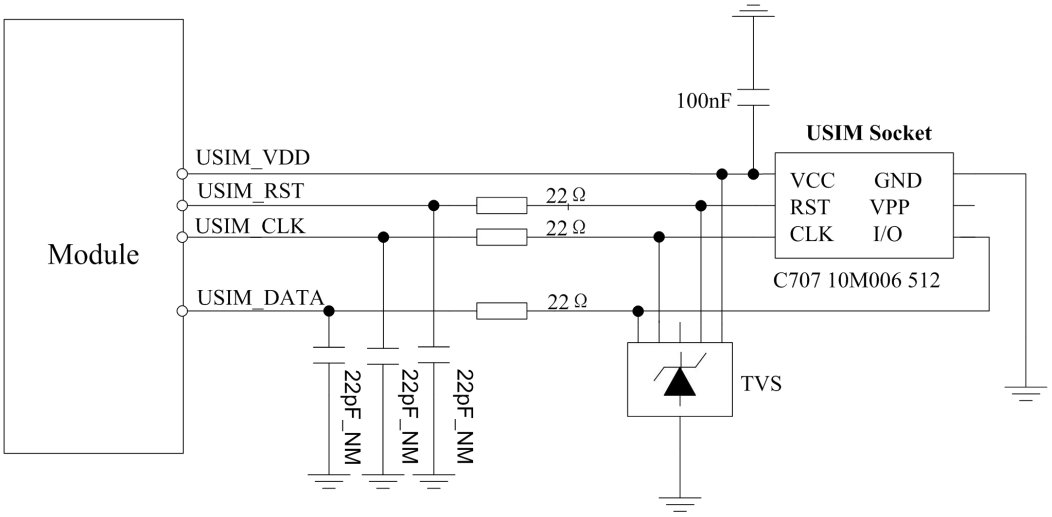


**Figure 19: USIM interface reference circuit**

***Note: USIM_DATA has been pulled up with a 10KΩ resistor to USIM_VDD in MODULE. A 100nF capacitor on USIM_VDD is used to reduce interference. For more details of AT commands about USIM, please refer to document [1].USIM_CLK is very important signal, the rise time and fall time of USIM_CLK should be less than 40ns, otherwise the USIM card might not be initialized correctly.***

## Recommended USIM Card Holder

It is recommended to use the 6-pin USIM socket such as C707 10M006 512 produced by Amphenol. User can visit http://www.amphenol.com for more information about the holder.

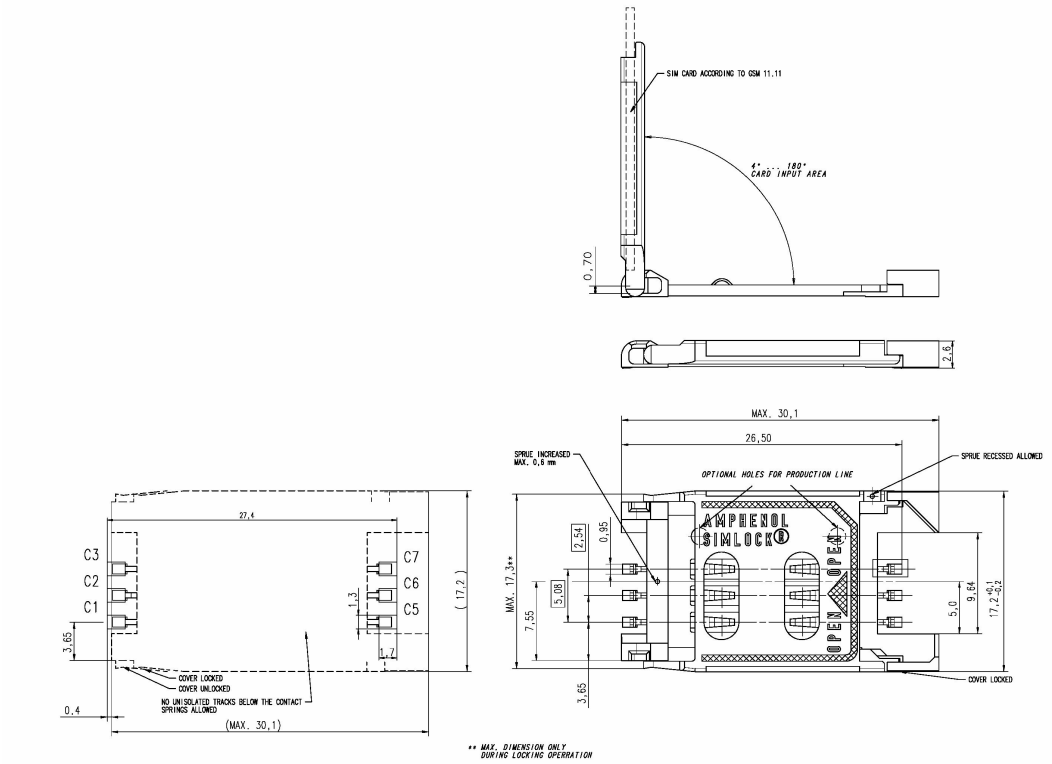


**Figure 20: Amphenol SIM card socket**

**Table 13: Amphenol USIM socket pin description**

| Pin | Signal | Description |
|---|---|---|
| C1 | USIM_VDD | USIM Card Power supply. |
| C2 | USIM_RST | USIM Card Reset. |
| C3 | USIM_CLK | USIM Card Clock. |
| C5 | GND | Connect to GND. |
| C6 | VPP | |
| C7 | USIM_DATA | USIM Card data I/O. |

## 3.6 PCM Interface

MODULE provides a PCM interface for external codec, which can be used in master mode with short sync and 16 bits linear format.

**Table 14: PCM format**

| Characteristics | Specification |
|---|---|
| Line Interface Format | Linear(Fixed) |
| Data length | 16bits(Fixed) |
| PCM Clock/Sync Source | Master Mode(Fixed) |
| PCM Clock Rate | 2048 KHz (Fixed) |
| PCM Sync Format | Short sync(Fixed) |
| Data Ordering | MSB |

***Note: For more details about PCM AT commands, please refer to document [1].***

### 3.6.1 PCM timing

MODULE supports 2.048 MHz PCM data and sync timing for 16 bits linear format codec.

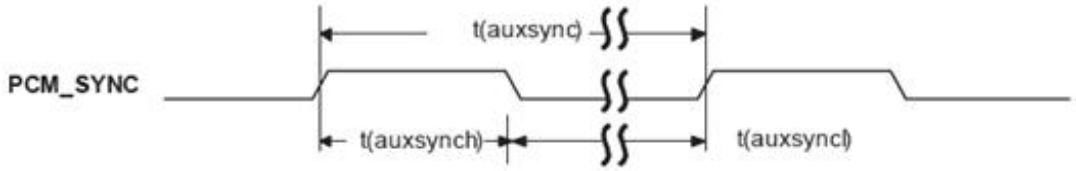


**Figure 21: PCM_SYNC timing**

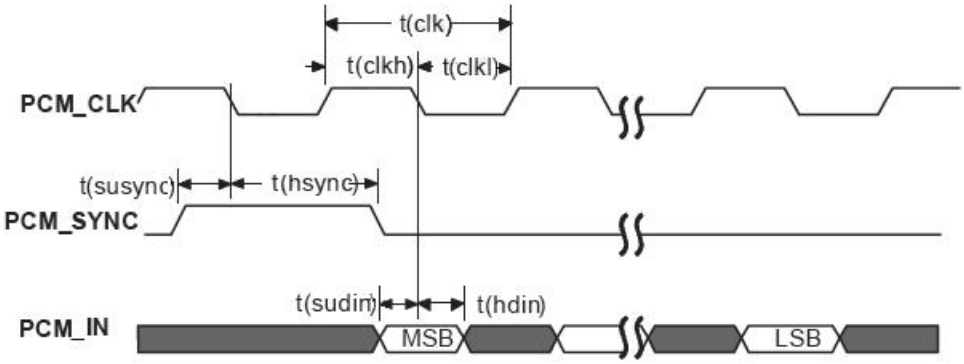


**Figure 22: EXT codec to MODULE timing**

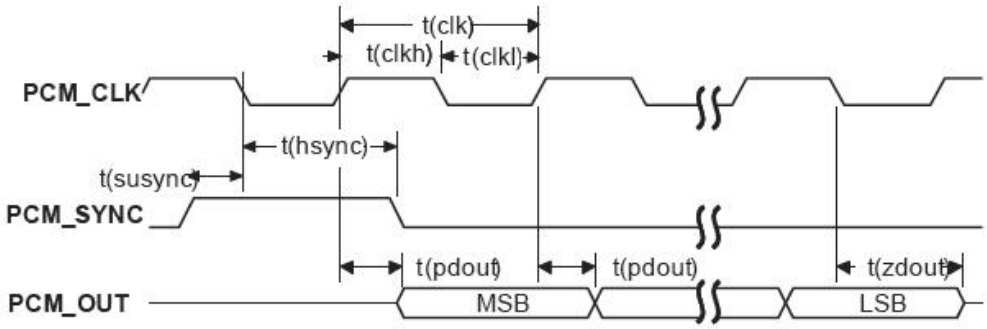


**Figure 23: Module to EXT codec timing**

**Table 15: PCM timing parameters**

| Parameter | Description | Min. | Typ. | Max. | Unit |
|---|---|---|---|---|---|
| T(sync) | PCM_SYNC cycle time | – | 125 | – | µs |
| T(synch) | PCM_SYNC high level time | – | 488 | – | ns |
| T(syncl) | PCM_SYNC low level time | – | 124.5 | – | µs |
| T(clk) | PCM_CLK cycle time | – | 488 | – | ns |
| T(clkh) | PCM_CLK high level time | – | 244 | – | ns |
| T(clkl) | PCM_CLK low level time | – | 244 | – | ns |
| T(susync) | PCM_SYNC setup time high before falling edge of PCM_CLK | – | 122 | – | ns |
| T(hsync) | PCM_SYNC hold time after falling edge of PCM_CLK | – | 366 | – | ns |
| T(sudin) | PCM_IN setup time before falling edge of PCM_CLK | 60 | – | – | ns |
| T(hdin) | PCM_IN hold time after falling edge of PCM_CLK | 60 | – | – | ns |
| T(pdout) | Delay from PCM_CLK rising to PCM_OUT valid | – | – | 60 | ns |
| T(zdout) | Delay from PCM_CLK falling to PCM_OUT HIGH-Z | – | – | 60 | ns |

### 3.6.2 PCM Application Guide

The following figure shows the external codec reference design.

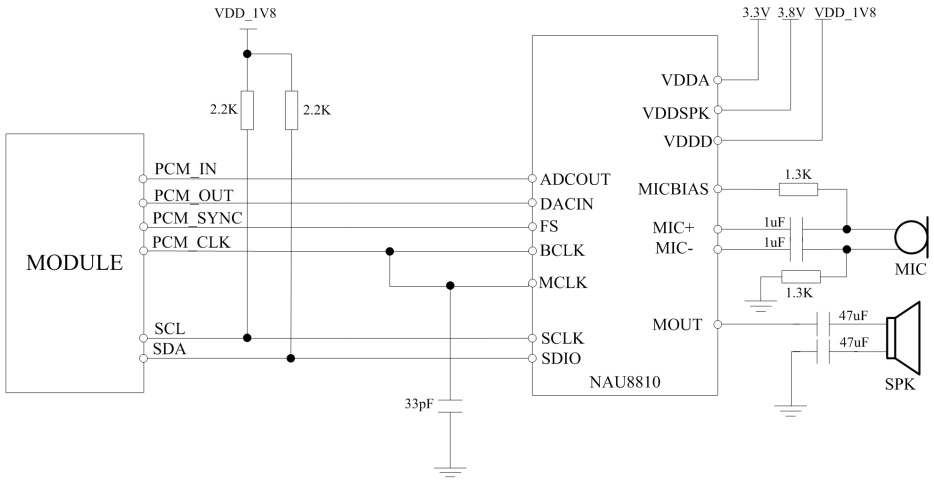


**Figure 24: Audio codec reference circuit**

## 3.7 SD Interface

MODULE provides a 4-bit SD/MMC interface with clock rate up to 200 MHz, The voltage of MMC/SD interface is 2.85V, which is compatible with SDIO Card Specification (version 3.0) and Secure Digital (Physical Layer Specification, version 3.0).It supports up to 32GB SD cards.

**Table 16: MMC/SD electronic characteristic (SD_DATA0-SD_DATA3， SD_CLK and SD_CMD) ***

| Symbol | Parameter | Min. | Typ. | Max. | Unit |
|---|---|---|---|---|---|
| $V_{IH}$ | High-level input voltage | 0.65*2.85 | - | 2.85+0.3 | V |
| $V_{IL}$ | Low-level input voltage | -0.3 | 0 | 0.25*2.85 | V |
| $V_{OH}$ | High-level output voltage | 2.85-0.4 | 2.85 | 2.85 | V |
| $V_{OL}$ | Low-level output voltage | 0 | 0 | 0.45 | V |

***Note:***

****Be different from SD_DATA0-SD_DATA3， SD_CLK and SD_CMD， SD_DET is 1.8V operation voltage.***

Customer should provide 2.85V for SD card and the current should more than 350mA. ESD/EMI components should be arranged beside SD card socket. Refer to the following application circuit.

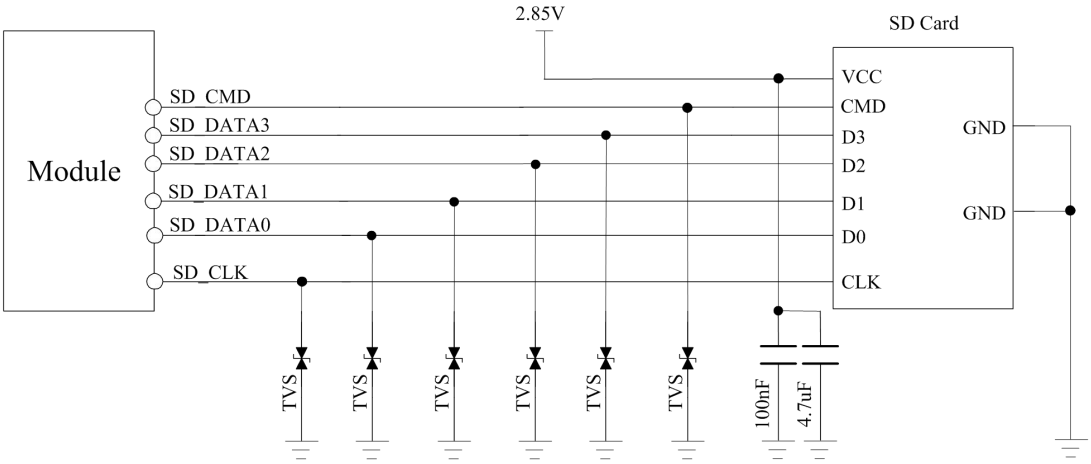


**Figure 25: SD reference circuit**

SD card layout guide lines:

- Protect other sensitive signals/circuits from SD card signals.
- Protect SD card signals from noisy signals (clocks, SMPS, etc.).
- Up to 200 MHz clock rate, 50 Ω nominal, ±10% trace impedance
- CLK to DATA/CMD length matching < 1 mm
- 15–24 Ω termination resistor on clock lines near MODULE
- Total routing length < 50 mm recommended
- Routing distance from MODULE clock pin to termination resistor < 5 mm
- Spacing to all other signals = 2x line width
- Bus capacitance < 15 pF

## 3.8 I2C Interface

MODULE provides a I2C interface compatible with I2C specification, version 5.0, with clock rate up to 400 kbps. Its operation voltage is 1.8V.

The following figure shows the I2C bus reference design.

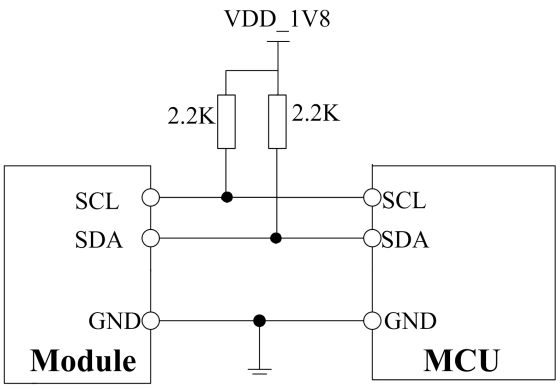


**Figure 26: I2C reference circuit**

***Note：SDA and SCL do not have pull-up resistors in MODULE. So, 2 external pull up resistors are needed in application circuit.***

***"AT+CRIIC and AT+CWIIC" AT commands could be used to read/write register values of the I2C peripheral devices. For more details about AT commands please refer to document [1].***

## 3.9 SDIO Interface

MODULE provides a 4 bit 1.8V SDIO interface for WLAN solution.
The default WLAN MODULE is W58, and the application need software support.
***Note: Only CAT4 MODULE support this function.***

## 3.10 SPI Interface

MODULE provides a SPI interface as a master only. Its operation voltage is 1.8V, and its clock rate is up to 26 MHz.
***Note：This function is not supported yet. For detail information please contact FAE.***

## 3.11 Network status

The NETLIGHT pin is used to control Network Status LED, its reference circuit is shown in the following figure.

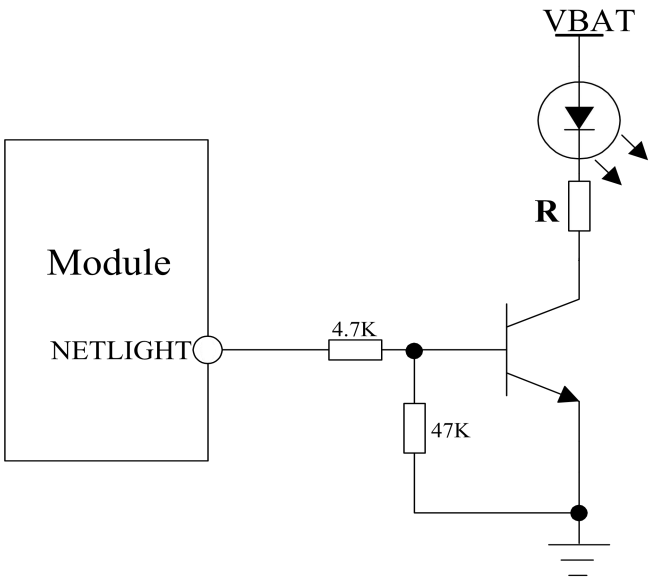


**Figure 27: NETLIGHT reference circuit**

***Note: The value of the resistor named "R" depends on the LED characteristic.***

**Table 17: NETLIGHT pin status**

| NETLIGHT pin status | Module status |
|---|---|
| Always On | Searching Network; Call Connect(include VOLTE,SRLTE) |
| 200ms ON, 200ms OFF | Data Transmit; 4G registered; |
| 800ms ON, 800ms OFF | 2G/3G registered network |
| OFF | Power off ;Sleep |

***Note: NETLIGHT output low level as "OFF", and high level as "ON".***

## 3.12 Flight Mode Control

The FLIGHTMODE pin can be used to control MODULE to enter or exit the Flight mode. In Flight mode, the RF circuit is closed to prevent interference with other equipments and minimize current consumption. Bidirectional ESD protection component is suggested to add on FLIGHTMODE pin, its reference circuit is shown in the following figure.

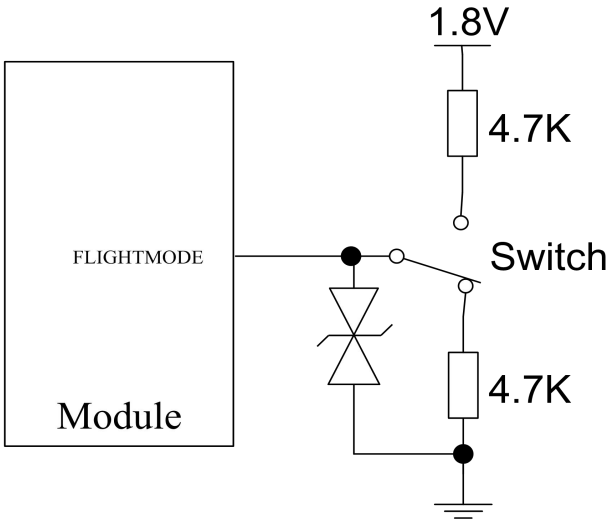


**Figure 28: Flight mode switch reference circuit**

**Table 18: FLIGHTMODE pin status**

| FLIGHTMODE pin status | Module operation |
|---|---|
| Input Low Level | Flight Mode: RF is closed |
| Input High Level | AT+CFUN=0: RF is closed<br>AT+CFUN=1:RF is working |

## 3.13 Other interface

### 3.13.1 Sink Current Source

The ISINK pin is VBAT tolerant and intended to drive some passive devices, such as LCD backlight and white LED, etc. Its output current can be up to 40mA and be set by the AT command "AT+ CLEDITST".

**Table 19: Sink current electronic characteristic**

| Symbol | Description | Min. | Typ. | Max. | Unit |
|---|---|---|---|---|---|
| $V_{ISINK}$ | Voltage tolerant | 0.5 | - | VBAT | V |
| $I_{ISINK}$ | Current tolerant | 0 | - | 40 | mA |

ISINK is a ground-referenced current sink. The following figure shows its reference circuit.

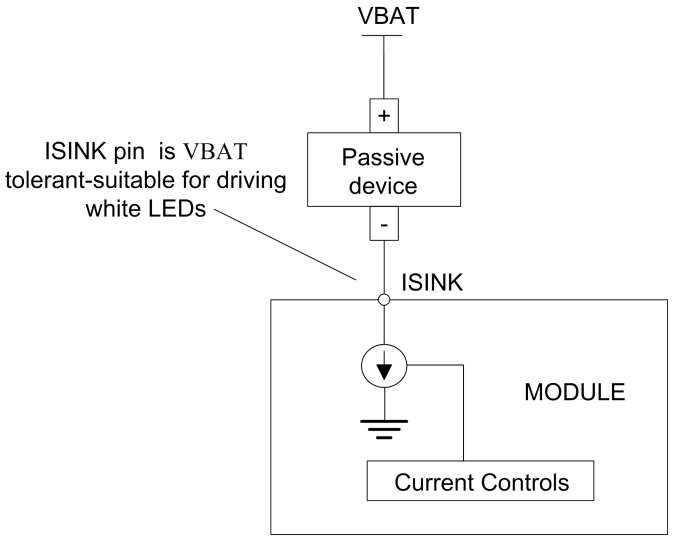


**Figure 29: ISINK reference circuit**

***Note: The sinking current can be adjusted to meet the design requirement through the AT command "AT+ CLEDITST =<0>, <value>".The "value" ranges from 0 to 8, on behalf of the current from 0mA to 40mA by 5mA step.***

### 3.13.2 ADC

MODULE has 2 dedicated ADC pins named ADC1 and ADC2.They are available for digitizing analog signals such as battery voltage and so on. These electronic specifications are shown in the following table.

**Table 20: ADC1 and ADC2 electronic characteristics**

| Characteristics | Min. | Typ. | Max. | Unit |
|---|---|---|---|---|
| Resolution | – | 15 | – | Bits |
| Conversion time | – | 442 | – | ms |
| Input Range | 0.1 | | 1.7 | V |
| Input serial resistance | 1 | – | – | MΩ |

***Note: "AT+CADC" and "AT+CADC2" can be used to read the voltage of the ADC1 and ADC2 pins, for more details, please refer to document [1].***

### 3.13.3 LDO

MODULE has a LDO power output, named VDD_AUX. its output voltage is 2.85V by default, Users can switch the LDO on or off by the AT command "AT+CVAUXS" and configure its output voltage by the AT command "AT+CVAUXV".

**Table 21: Electronic characteristic**

| Symbol | Description | Min. | Typ. | Max. | Unit |
|---|---|---|---|---|---|
| $V_{VDD_AUX}$ | Output voltage | 1.7 | 2.85 | 3.05 | V |
| $I_O$ | Output current | - | - | 150 | mA |

***Note：For more details of AT commands about VDD_AUX, please refer to document [1].***

# 4 RF Specifications

## 4.1 GSM/UMTS/LTE RF Specifications

**Table 22: Conducted transmission power**

| Frequency | Power | Min. |
|---|---|---|
| EGSM900 | 33dBm ±2dB | 5dBm ± 5dB |
| DCS1800 | 30dBm ±2dB | 0dBm ± 5dB |
| EGSM900 (8-PSK) | 27dBm ±3dB | 5dBm ± 5dB |
| DCS1800 (8-PSK) | 26dBm +3/-4dB | 0dBm ±5dB |
| WCDMA B1 | 24dBm +1/-3dB | <-50dBm |
| WCDMA B5 | 24dBm +1/-3dB | <-50dBm |
| WCDMA B8 | 24dBm + 1/-3dB | <-50dBm |
| LTE-FDD B1 | 23dBm +/-2.7dB | <-40dBm |
| LTE-FDD B3 | 23dBm +/-2.7dB | <-40dBm |
| LTE-FDD B5 | 23dBm +/-2.7dB | <-40dBm |
| LTE-FDD B7 | 23dBm +/-2.7dB | <-40dBm |
| LTE-TDD B8 | 23dBm +/-2.7dB | <-40dBm |
| LTE-FDD B20 | 23dBm +/-2.7dB | <-40dBm |
| LTE-TDD B38 | 23dBm +/-2.7dB | <-40dBm |
| LTE-TDD B40 | 23dBm +/-2.7dB | <-40dBm |
| LTE-TDD B41 | 23dBm +/-2.7dB | <-40dBm |

**Table 23: Operating frequencies**

| Frequency | Receiving | Transmission |
|---|---|---|
| EGSM900 | 925～960MHz | 880～915 MHz |
| DCS1800 | 1805～1880 MHz | 1710～1785 MHz |
| WCDMA B1 | 2110～2170 MHz | 1920～1980 MHz |
| WCDMA B5 | 869～894 MHz | 824～849 MHz |
| WCDMA B8 | 925～960 MHz | 880～915 MHz |
| The LTE Operating frequencies are shown in the following table 24.<br>Note: Operating frequencies of LTE TDD B41 for the MODULE is 100MHz BW, 2555～2655 MHz | | |
| GPS | 1574.4 ～1576.44 MHz | - |
| GLONASS | 1598 ～1606 MHz | - |
| BD | 1559 ～1563 MHz | |

**Table 24: E-UTRA operating bands**

| E-UTRA operating band | Uplink (UL) operating band | Downlink(DL) operating band | Duplex Mode |
|---|---|---|---|
| 1 | 1920 ~1980 MHz | 2110 ~2170 MHz | FDD |
| 3 | 1710 ~1785 MHz | 1805 ~1880 MHz | FDD |
| 5 | 824～849 MHz | 869～894MHz | FDD |
| 7 | 2500~2570MHz | 2620~2690MHz | FDD |
| 8 | 880 ~915 MHz | 925 ~960 MHz | FDD |
| 20 | 832~862MHz | 791~ 821 | FDD |
| 38 | 2570 ~2620 MHz | 2570 ~2620 MHz | TDD |
| 40 | 2300 ~2400 MHz | 2300 ~2400 MHz | TDD |
| 41 | 2496 ~2690 MHz | 2496 ~2690 MHz | TDD |

**Table 25: Conducted receive sensitivity**

| Frequency | Receive sensitivity(Typical) | Receive sensitivity(MAX) |
|---|---|---|
| EGSM900 | < -109dBm | 3GPP |
| DCS1800 | < -109dBm | 3GPP |
| WCDMA 2100 | < -110dBm | 3GPP |
| WCDMA 900 | < -110dBm | 3GPP |
| WCDMA 800 | < -110dBm | 3GPP |
| LTE FDD/TDD | See table 26. | 3GPP |

**Table 26: Reference sensitivity (QPSK)**

| E-UTRA band | 3GPP standard | | | | Test value | 3GPP standard | | Duplex |
|---|---|---|---|---|---|---|---|---|
| | 1.4 MHz | 3MHz | 5MHz | 10MHz | 10 MHz | 15 MHz | 20 MHz | |
| 1 | - | - | -100 | -97 | -101 | -95.2 | -94 | FDD |
| 3 | -101.7 | -98.7 | -97 | -94 | -99 | -92.2 | -91 | FDD |
| 5 | -103.2 | -100.2 | -98 | -95 | -99 | | | FDD |
| 7 | | | -98 | -95 | -97 | -93.2 | -92 | FDD |
| 8 | -102.2 | -99.2 | -97 | -94 | -102 | | | FDD |
| 20 | | | -97 | -94 | -97 | -91.2 | -90 | FDD |
| 38 | - | - | -100 | -97 | -101 | -95.2 | -94 | TDD |
| 40 | - | - | -100 | -97 | -101 | -95.2 | -94 | TDD |
| 41 | - | - | -99 | -96 | -101 | -94.2 | -93 | TDD |

## 4.2 GSM /UMTS/LTE Antenna Design Guide

Users should connect antennas to MODULE's antenna pads through micro-strip line or other types of RF trace and the trace impedance must be controlled in 50Ω. SIMCom recommends that the total insertion loss between the antenna pads and antennas should meet the following requirements:

**Table 27: Trace loss**

| Frequency | Loss |
|---|---|
| 700MHz-960MHz | <0.5dB |
| 1710MHz-2170MHz | <0.9dB |
| 2300MHz-2650MHz | <1.2dB |

To facilitate the antenna tuning and certification test, a RF connector and an antenna matching circuit should be added. The following figure is the recommended circuit.

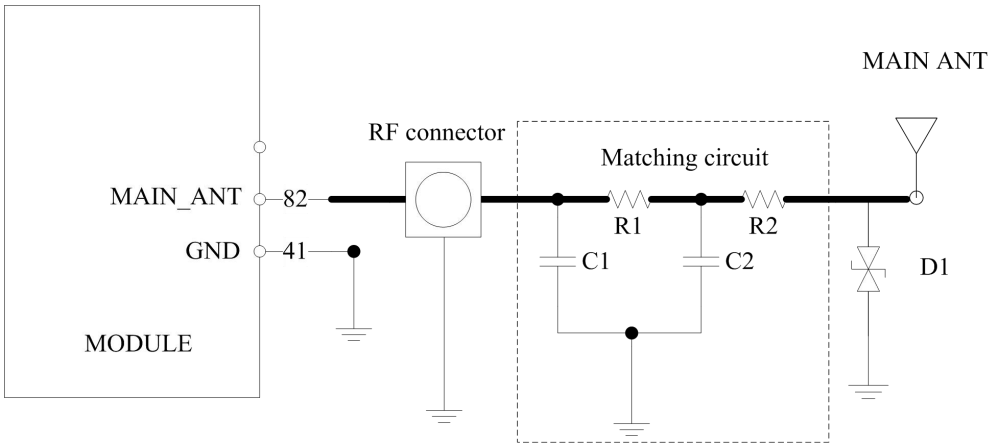


**Figure 30: Antenna matching circuit (MAIN_ANT)**

In above figure, the components R1, C1, C2 and R2 are used for antenna matching, the values of components can only be achieved after the antenna tuning and usually provided by antenna vendor. By default, the R1, R2 are 0 Ω resistors, and the C1, C2 are reserved for tuning. The component D1 is a TVS for ESD protection, and it is optional for users according to application environment.
The RF test connector is used for the conducted RF performance test, and should be placed as close as to the MODULE's MAIN_ANT pin. The traces impedance between MODULE and antenna must be controlled in 50 Ω.

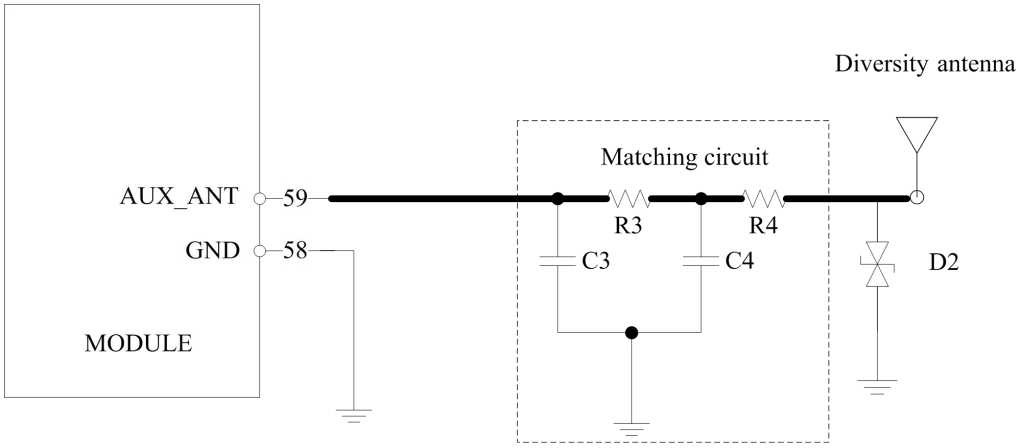


**Figure 31: Antenna matching circuit (AUX_ANT)**

In above figure, R3, C3, C4 and R4 are used for auxiliary antenna matching. By default, the R3, R4 are 0 Ω resistors, and the C3, C4 are reserved for tuning. D2 is a TVS for ESD protection, and it is optional for users according to application environment.
Two TVS are recommended in the table below.

**Table 28: Recommended TVS**

| Package | Part Number | Vender |
|---|---|---|
| 0201 | LXES03AAA1-154 | Murata |
| 0402 | LXES15AAA1-153 | Murata |

***Note：SIMCom suggests the LTE auxiliary antenna to be kept on, since there are many high bands in the designing of LTE-TDD, such as band38, band40 and band41. Because of the high insert loss of the RF cable and layout lines, the receiver sensitivity of these bands above will have risk to meet the authentication without the diversity antenna. For more details about auxiliary antenna design notice, please refer to document [25].***

## 4.3 GNSS

MODULE merges GNSS (GPS/GLONASS/BD) satellite and network information to provide a high-availability solution that offers industry-leading accuracy and performance. This solution performs well, even in very challenging environmental conditions where conventional GNSS receivers fail, and provides a platform to enable wireless operators to address both location-based services and emergency mandates.

### 4.3.1 GNSS Technical specification

- Tracking sensitivity: -159 dBm（GPS）/-158 dBm（GLONASS）/-159 dBm（BD）
- Cold-start sensitivity: -148 dBm
- Accuracy (Open Sky): 2.5m (CEP50)
- TTFF (Open Sky) : Hot start <1s, Cold start<35s

- Receiver Type: 16-channel, C/A Code
- GPS L1 Frequency: 1575.42±1.023MHz
- GLONASS: 1597.5~1605.8 MHz
- BD: 1559.05~1563.14 MHz
- Update rate: Default 1 Hz
- GNSS data format: NMEA-0183
- GNSS Current consumption : 100mA (GSM/UMTS/LTE Sleep ,in total on VBAT pins)
- GNSS antenna: Passive/Active antenna

***Note: If the antenna is active type, the power should be given by main board because there is no power supply on the GPS antenna pad. If the antenna is passive, it is suggested that the external LNA should be used.***

### 4.3.2 GNSS Application Guide

Users can adopt an active antenna or a passive antenna to MODULE. If using a passive antenna, an external LNA is a must to get better performance. The following figures are the reference circuits.

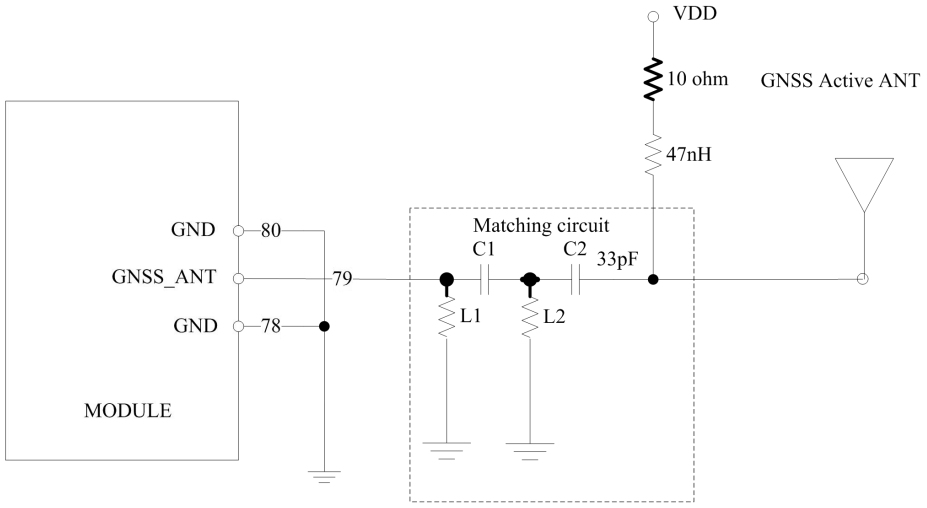


**Figure 32: Active antenna circuit**

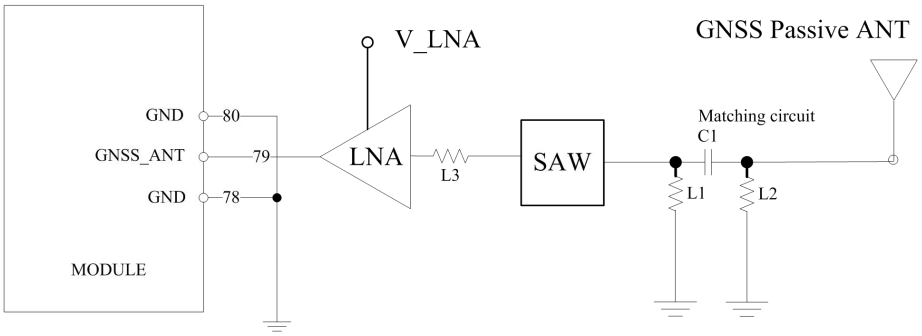


**Figure 33: Passive antenna circuit (Default)**

In above figures, the components C1, L1 and L2 are used for antenna matching. Usually, the values of the components can only be achieved after antenna tuning and usually provided by antenna vendor. C2 is used for DC blocking. L3 is the matching component of the external LNA, and the value of L3 is determined by the LNA characteristic and PCB layout. Both VDD of active antenna and V_LNA need external power supplies which should be considered according to active antenna and LNA characteristic. LDO/DCDC is recommended to get lower current consuming by shutting down active antennas and LNA when GNSS is not working.

GNSS can be tested by NMEA port. NMEA sentences can be obtained through UART or USB automatically. NMEA sentences include GSV, GGA, RMC, GSA, and VTG. Before using GNSS, user should configure MODULE in proper operating mode by AT command. Please refer to related documents for details. MODULE can also get position location information through AT directly.

***Note: GNSS is closed by default and can be started by AT+CGPS. The AT command has two parameters, the first is on/off, and the second is GNSS mode. Default mode is standalone mode. AGPS mode needs more support from the mobile telecommunication network. Please refer to document [24] for more details.***

# 5 Electrical Specifications

## 5.1 Absolute maximum ratings

Absolute maximum rating for digital and analog pins of MODULE are listed in the following table:

**Table 29: Absolute maximum ratings**

| Parameter | Min. | Typ. | Max. | Unit |
|---|---|---|---|---|
| Voltage at VBAT | -0.5 | - | 6.0 | V |
| Voltage at USB_VBUS | -0.5 | - | 5.85 | V |
| Voltage at digital pins (RESET,SPI,Keypad,GPIO,I2C,UART,PCM) | -0.3 | - | 2.1 | V |
| Voltage at digital pins (SD,USIM) | -0.3 | - | 3.05 | V |
| Voltage at PWRKEY | -0.3 | - | 1.8 | |

## 5.2 Operating conditions

**Table 30: Recommended operating ratings**

| Parameter | Min. | Typ. | Max. | Unit |
|---|---|---|---|---|
| Voltage at VBAT | 3.4 | 3.8 | 4.2 | V |
| Voltage at USB_VBUS | 3.0 | 5.0 | 5.25 | V |

**Table 31: 1.8V Digital I/O characteristics***

| Parameter | Description | Min. | Typ. | Max. | Unit |
|---|---|---|---|---|---|
| $V_{IH}$ | High-level input voltage | 1.17 | 1.8 | 2.1 | V |
| $V_{IL}$ | Low-level input voltage | -0.3 | 0 | 0.63 | V |
| $V_{OH}$ | High-level output voltage | 1.35 | - | 1.8 | V |
| $V_{OL}$ | Low-level output voltage | 0 | - | 0.45 | V |
| $I_{OH}$ | High-level output current(no pull down resistor) | - | 2 | - | mA |
| $I_{OL}$ | Low-level output current(no pull up resistor) | - | -2 | - | mA |
| $I_{IH}$ | Input high leakage current (no pull down resistor) | - | - | 1 | uA |
| $I_{IL}$ | Input low leakage current(no | -1 | - | - | uA |

| | | | | | |
|---|---|---|---|---|---|
| | pull up resistor) | | | | |

***Note: These parameters are for digital interface pins, such as SPI, GPIOs (NETLIGHT, FLIGHTMODE, STATUS, USIM_DET, SD_DET), SDIO, I2C, UART, PCM, COEXn, and BOOT_CFG0.***

The operating temperature of MODULE is listed in the following table.

**Table 32: Operating temperature**

| Parameter | Min. | Typ. | Max. | Unit |
|---|---|---|---|---|
| Normal operation temperature | -30 | 25 | 80 | ℃ |
| Extended operation temperature* | -40 | 25 | 85 | ℃ |
| Storage temperature | -45 | 25 | +90 | ℃ |

***Note: Module is able to make and receive voice calls, data calls, SMS and make GSM/ UMTX/LTE traffic in -40℃ ~ +85℃. The performance will be reduced slightly from the 3GPP specifications if the temperature is outside the normal operating temperature range and still within the extreme operating temperature range.***

## 5.3 Operating Mode

### 5.3.1 Operating Mode Definition

The table below summarizes the various operating modes of MODULE product.

**Table 33: Operating mode Definition**

| Mode | | Function |
|---|---|---|
| Normal operation | GSM /UMTS/LTE Sleep | In this case, the current consumption of MODULE will be reduced to the minimal level and the MODULE can still receive paging message and SMS. |
| | GSM/UMTS/LTE Idle | Software is active. Module is registered to the network, and the MODULE is ready to communicate. |
| | GSM/UMTS/LTE Talk | Connection between two subscribers is in progress. In this case, the power consumption depends on network settings such as DTX off/on, FR/EFR/HR, hopping sequences, and antenna. |
| | GPRS/EDGE/ UMTS/LTE Standby | Module is ready for data transmission, but no data is currently sent or received. In this case, power consumption depends on network settings. |
| | GPRS/EDGE/ UMTS/LTE Data transmission | There is data transmission in progress. In this case, power consumption is related to network settings (e.g. power control level); uplink/downlink data rates, etc. |
| Minimum functionality mode | | AT command “AT+CFUN=0” AT+CSCLK=1 can be used to set the MODULE to a minimum functionality mode without removing the power supply. In this mode, the RF part of the MODULE will not |

| | |
|---|---|
| | work and the USIM card will not be accessible, but the serial port and USB port are still accessible. The power consumption in this mode is lower than normal mode. |
| Flight mode | AT command "AT+CFUN=4" or pulling down the FLIGHTMODE pin can be used to set the MODULE to flight mode without removing the power supply. In this mode, the RF part of the MODULE will not work, but the serial port and USB port are still accessible. The power consumption in this mode is lower than normal mode. |
| Power off | Module will go into power off mode by sending the AT command "AT+CPOF" or pull down the PWRKEY pin, normally. In this mode the power management unit shuts down the power supply, and software is not active. The serial port and USB are is not accessible. |

### 5.3.2 Sleep mode

In sleep mode, the current consumption of MODULE will be reduced to the minimal level, and MODULE can still receive paging message and SMS.
Several hardware and software conditions must be satisfied together in order to let MODULE enter into sleep mode:
1. UART condition
2. USB condition
3. Software condition
***Note: Before designing, pay attention to how to realize sleeping/waking function and refer to Document [26] for more details.***

### 5.3.3 Minimum functionality mode and Flight mode

Minimum functionality mode ceases a majority function of MODULE, thus minimizing the power consumption. This mode is set by the AT command which provides a choice of the functionality levels.

- AT+CFUN=0: Minimum functionality
- AT+CFUN=1: Full functionality (Default)
- AT+CFUN=4: Flight mode

If MODULE has been set to minimum functionality mode, the RF function and USIM card function will be closed. In this case, the serial port and USB are still accessible, but RF function and USIM card will be unavailable.
If MODULE has been set to flight mode, the RF function will be closed. In this case, the serial port and USB are still accessible, but RF function will be unavailable.
When MODULE is in minimum functionality or flight mode, it can return to full functionality by the AT command "AT+CFUN=1".

## 5.4 Current Consumption

The current consumption is listed in the table below.

**Table 34: Current consumption on VBAT Pins (VBAT=3.8V)**

| | |
|---|---|
| **GNSS** | |
| GNSS supply current<br>(AT+CFUN=0,with USB connection) | @ -140dBm，Tracking Typical:35mA |
| **GSM sleep/idle mode** | |
| GSM/GPRS supply current<br>(GNSS off，without USB connection) | Sleep mode@ BS_PA_MFRMS=2 Typical: 2.8mA<br>Idle mode@ BS_PA_MFRMS=2 Typical: 18mA |
| **UMTS sleep/idle mode** | |
| WCDMA supply current<br>(GNSS off，without USB connection) | Sleep mode @DRX=9 Typical: 3.3mA<br>Idle mode @DRX=9 Typical: 17.5mA |
| **LTE sleep/idle mode** | |
| LTE supply current<br>(GNSS off，without USB connection) | Sleep mode Typical: 4.6mA<br>Idle mode Typical: 17.5mA |
| **GSM Talk** | |
| EGSM900 | @power level #5 Typical: 220mA |
| DCS1800 | @power level #5 Typical: 162mA |
| **UMTS Talk** | |
| WCDMA B1 | @Power 24dBm Typical: 540mA |
| WCDMA B5 | @Power 24dBm Typical: 530mA |
| WCDMA B8 | @Power 24dBm Typical: 385mA |
| **GPRS** | |
| EGSM900( 1 Rx,4 Tx ) | @power level #5 Typical: 230mA |
| DCS1800( 1 Rx,4 Tx ) | @power level #0 Typical: 195mA |
| EGSM900( 3Rx, 2 Tx ) | @power level #5 Typical: 370mA |
| DCS1800( 3Rx, 2 Tx ) | @power level #0 Typical: 275mA |
| **EDGE** | |
| EGSM900( 1 Rx,4 Tx ) | @power level #8 Typical: 400mA |
| DCS1800( 1 Rx,4 Tx ) | @power level #2 Typical: 300mA |
| EGSM900( 3Rx, 2 Tx ) | @power level #8 Typical: 320mA |
| DCS1800( 3Rx, 2 Tx ) | @power level #2 Typical: 230mA |
| **HSDPA data** | |
| WCDMA B1 | @Power 24dBm Typical: 478mA |
| WCDMA B5 | @Power 24dBm Typical: 480mA |
| WCDMA B8 | @Power 24dBm Typical: 430mA |
| **LTE data** | |
| LTE-FDD B1 | @5Mbps 22.3dBm Typical: 577mA<br>@10Mbps 22.4dBm Typical: 590mA<br>@20Mbps 22.4dBm Typical: 630mA |
| LTE-FDD B3 | @5Mbps 22.2dBm Typical: 479mA<br>@10Mbps 22.1dBm Typical: 498mA<br>@20Mbps 22.1dBm Typical: 530mA |
| LTE-FDD B5 | @5Mbps 22.2dBm Typical: 610mA |

| | | | |
|---|---|---|---|
| | @10Mbps | 22.1dBm | Typical: 600mA |
| | @20Mbps | 22.1dBm | Typical: 630mA |
| LTE-FDD B7 | @5Mbps | 22.2dBm | Typical: 650mA |
| | @10Mbps | 22.1dBm | Typical: 650mA |
| | @20Mbps | 22.1dBm | Typical: 630mA |
| LTE-FDD B8 | @5Mbps | 22.8dBm | Typical: 644mA |
| | @10Mbps | 22.8dBm | Typical: 646mA |
| LTE-TDD B20 | @5Mbps | 21.8dBm | Typical: 579mA |
| | @10Mbps | 21.8dBm | Typical: 590mA |
| | @20Mbps | 21.8dBm | Typical: 600mA |
| LTE-TDD B38 | @5Mbps | 21.8dBm | Typical: 370mA |
| | @10Mbps | 21.8dBm | Typical: 380mA |
| | @20Mbps | 21.8dBm | Typical: 403mA |
| LTE-TDD B40 | @5Mbps | 21.5dBm | Typical: 407mA |
| | @10Mbps | 21.7dBm | Typical: 416mA |
| | @20Mbps | 21.7dBm | Typical: 444mA |
| LTE-TDD B41 | @5Mbps | 21.6dBm | Typical: 390mA |
| | @10Mbps | 21.7dBm | Typical: 396mA |
| | @20Mbps | 21.7dBm | Typical: 420mA |

## 5.5 ESD Notes

MODULE is sensitive to ESD in the process of storage, transporting, and assembling. When MODULE is mounted on the users' mother board, the ESD components should be placed beside the connectors which human body may touch, such as USIM card holder, audio jacks, switches, keys, etc. The following table shows the MODULE ESD measurement performance without any external ESD component.

**Table 35: The ESD performance measurement table (Temperature: 25℃, Humidity: 45%)**

| Part | Contact discharge | Air discharge |
|---|---|---|
| VBAT,GND | +/-6K | +/-12K |
| Antenna port | +/-5K | +/-10K |
| USB | +/-4K | +/-8K |
| UART | +/-3K | +/-6K |
| Other PADs | +/-3K | +/-6K |

# 6 SMT Production Guide

## 6.1 Top and Bottom View of MODULE

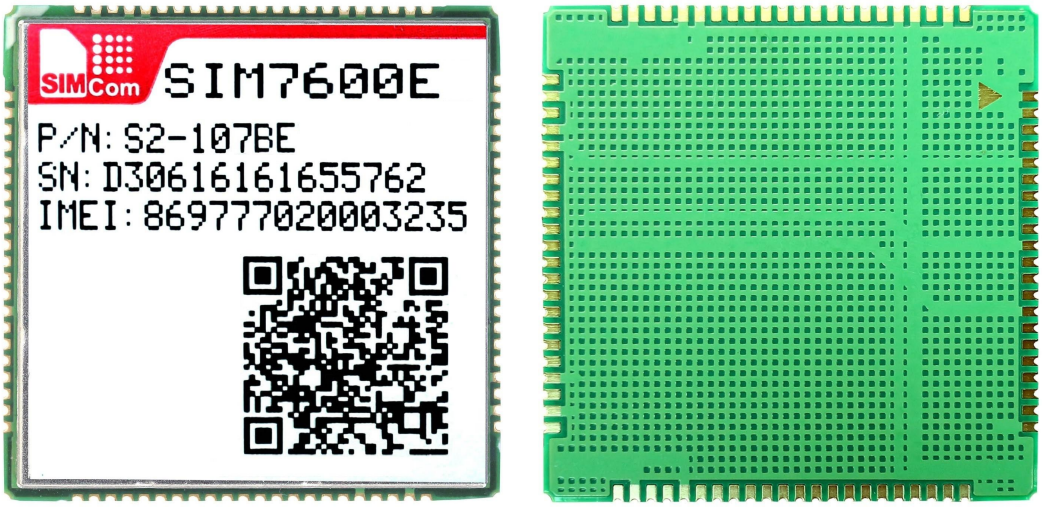


**Figure 34: Top and bottom view of MODULE**

## 6.2 Label Information

**Figure 35: Label information**

**Table 36: The description of label information**

| No. | Description |
|---|---|
| A | LOGO |
| B | Module part number |
| C | Project name |
| D | Serial number |
| E | International mobile equipment identity |
| F | QR code |

## 6.3 Typical SMT Reflow Profile

SIMCom provides a typical soldering profile. Therefore the soldering profile shown below is only

a generic recommendation and should be adjusted to the specific application and manufacturing constraints.

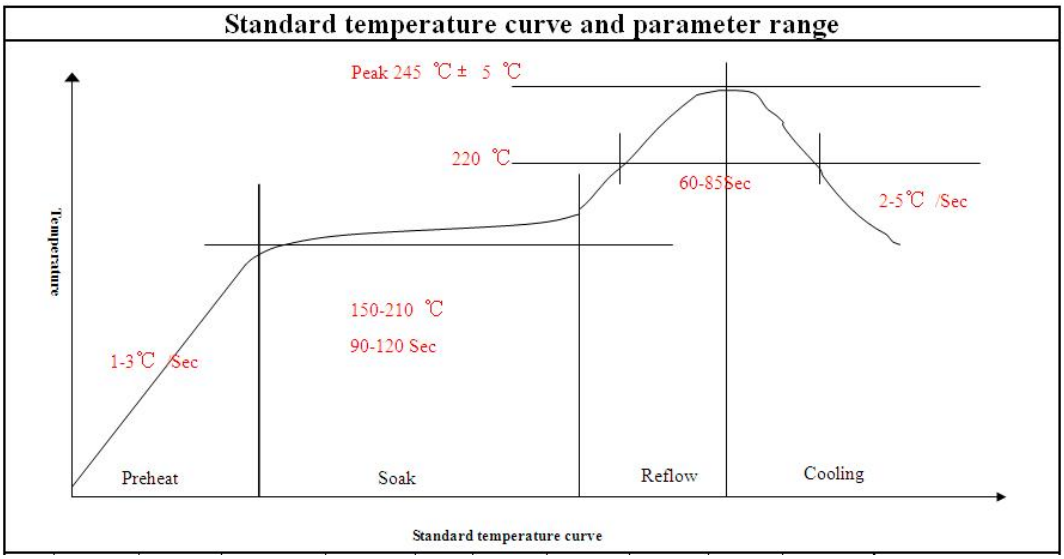


**Figure 36: The ramp-soak-spike reflow profile of MODULE**

***Note: For more details about secondary SMT, please refer to the document [21].***

## 6.4 Moisture Sensitivity Level (MSL)

MODULE is qualified to Moisture Sensitivity Level (MSL) 3 in accordance with JEDEC J-STD-033. If the prescribed time limit is exceeded, users should bake MODULE for 192 hours in drying equipment (<5% RH) at 40+5/-0°C, or 72 hours at 85+5/-5°C. Note that plastic tray is not heat-resistant, and only can be baked at 45° C.

**Table 37: Moisture Sensitivity Level and Floor Life**

| Moisture Sensitivity Level (MSL) | Floor Life (out of bag) at factory ambient≤30°C/60% RH or as stated |
|---|---|
| 1 | Unlimited at ≦30℃/85% RH |
| 2 | 1 year |
| 2a | 4 weeks |
| 3 | 168 hours |
| 4 | 72 hours |
| 5 | 48 hours |
| 5a | 24 hours |
| 6 | Mandatory bake before use. After bake, it must be reflowed within the time limit specified on the label. |

***NOTE: IPC / JEDEC J-STD-033 standard must be followed for production and storage.***

## 6.5 Stencil Foil Design Recommendation

The recommended thickness of stencil foil is more than 0.15mm.

# 7 Packaging

MODULE support tray packaging.

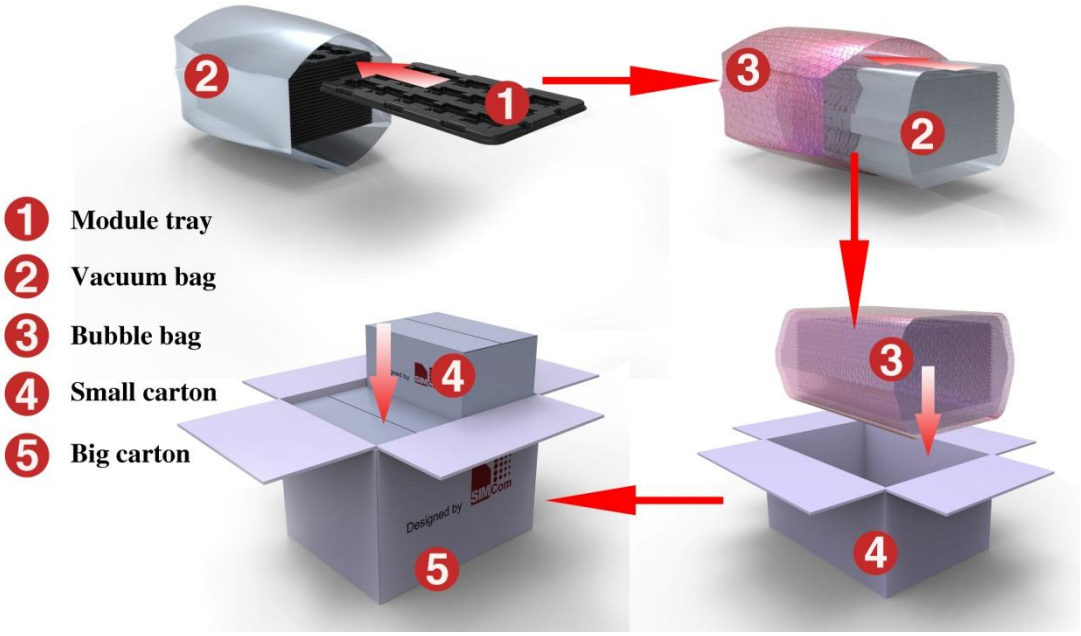


**Figure 37: packaging diagram**

Module tray drawing：

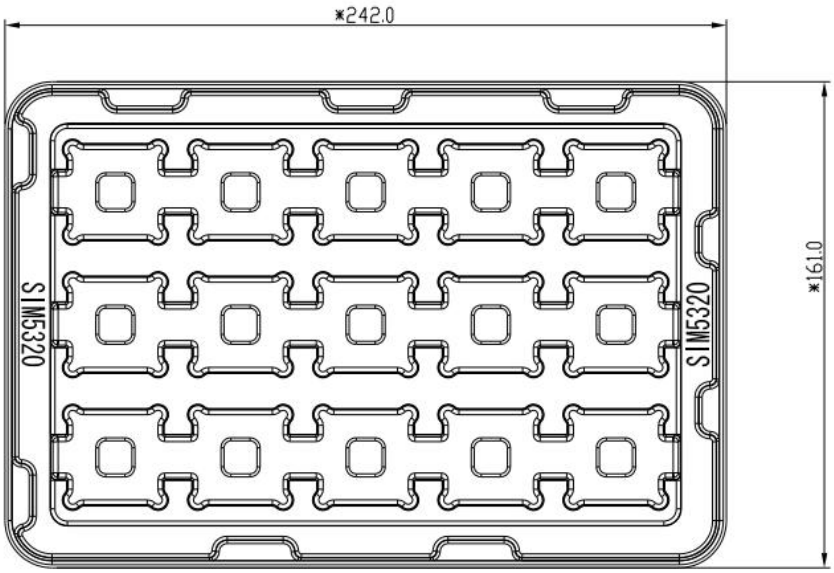


**Figure 38: Tray drawing**

**Table 38: Tray size**

| Length（±3mm） | Width（±3mm） | Number |
|---|---|---|
| 242.0 | 161.0 | 15 |

Small carton drawing：

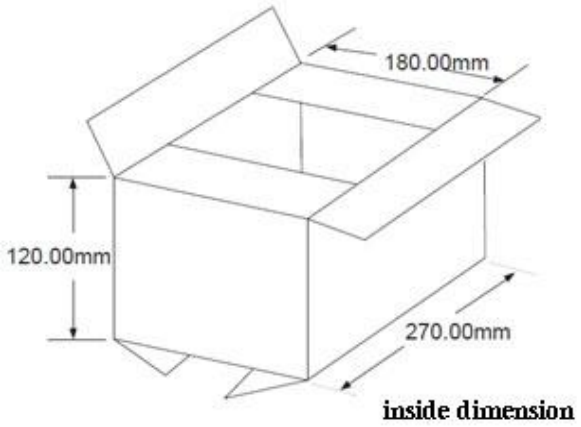


**Figure 39: Small carton drawing**

**Table 39: Small Carton size**

| Length（±10mm） | Width（±10mm） | Height（±10mm） | Number |
|---|---|---|---|
| 270 | 180 | 120 | 15*20=300 |

Big carton drawing：

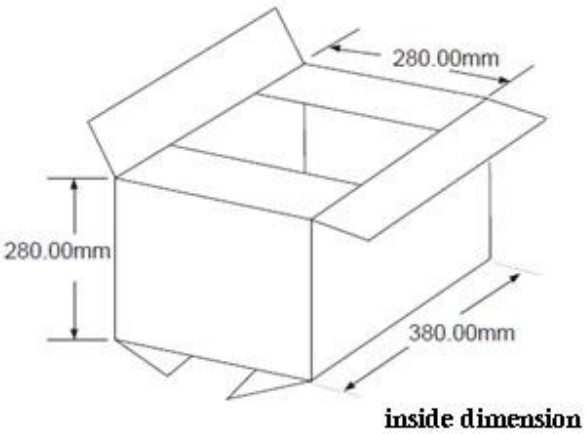


**Figure 40: Big carton drawing**

**Table 40: Big Carton size**

| Length（±10mm） | Width（±10mm） | Height（±10mm） | Number |
|---|---|---|---|
| 380 | 280 | 280 | 300*4=1200 |

# Appendix

## A. Reference Design

Refer to < SIM7600 Reference Design V1.X.pdf > for the details.

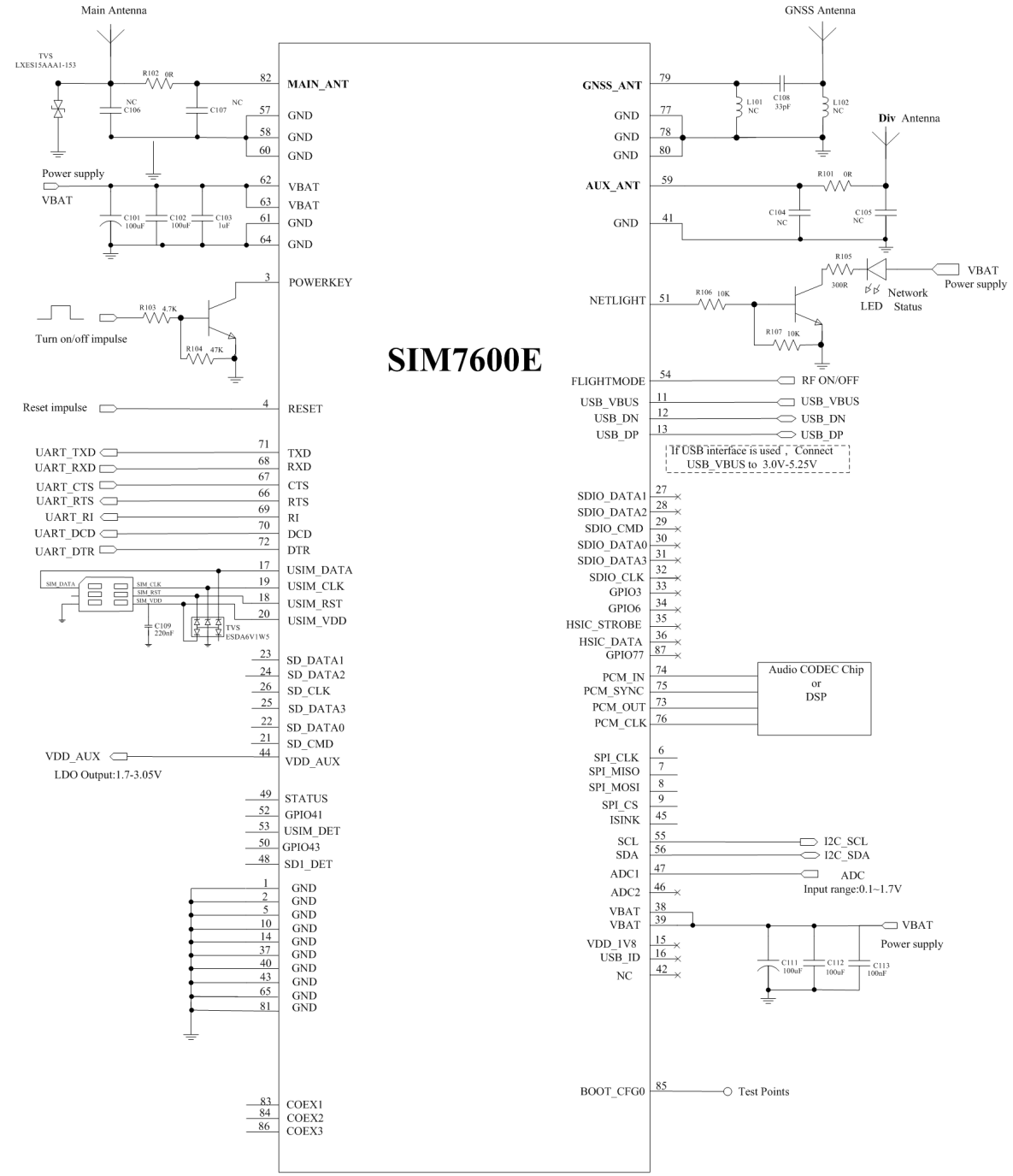


**Figure 41: Reference design**

# B. Coding Schemes and Maximum Net Data Rates over Air Interface

**Table 41: Coding Schemes and Maximum Net Data Rates over Air Interface**

| Multislot definition(GPRS/EDGE) | | | |
|---|---|---|---|
| **Slot class** | **DL slot number** | **UL slot number** | **Active slot number** |
| 1 | 1 | 1 | 2 |
| 2 | 2 | 1 | 3 |
| 3 | 2 | 2 | 3 |
| 4 | 3 | 1 | 4 |
| 5 | 2 | 2 | 4 |
| 6 | 3 | 2 | 4 |
| 7 | 3 | 3 | 4 |
| 8 | 4 | 1 | 5 |
| 9 | 3 | 2 | 5 |
| 10 | 4 | 2 | 5 |
| 11 | 4 | 3 | 5 |
| 12 | 4 | 4 | 5 |
| **GPRS coding scheme** | **Max data rata（4 slots）** | | **Modulation type** |
| CS 1 = 9.05 kb/s / time slot | 36.2 kb/s | | GMSK |
| CS 2 = 13.4 kb/s / time slot | 53.6 kb/s | | GMSK |
| CS 3 = 15.6 kb/s / time slot | 62.4 kb/s | | GMSK |
| CS 4 = 21.4 kb/s / time slot | 85.6 kb/s | | GMSK |
| **EDGE coding scheme** | **Max data rata（4 slots）** | | **Modulation type** |
| MCS 1 = 8.8 kb/s/ time slot | 35.2 kb/s | | GMSK |
| MCS 2 = 11.2 kb/s/ time slot | 44.8 kb/s | | GMSK |
| MCS 3 = 14.8 kb/s/ time slot | 59.2 kb/s | | GMSK |
| MCS 4 = 17.6 kb/s/ time slot | 70.4 kb/s | | GMSK |
| MCS 5 = 22.4 kb/s/ time slot | 89.6 kb/s | | 8PSK |
| MCS 6 = 29.6 kb/s/ time slot | 118.4 kb/s | | 8PSK |
| MCS 7 = 44.8 kb/s/ time slot | 179.2 kb/s | | 8PSK |
| MCS 8 = 54.4 kb/s/ time slot | 217.6 kb/s | | 8PSK |
| MCS 9 = 59.2 kb/s/ time slot | 236.8 kb/s | | 8PSK |
| **HSDPA device category** | **Max data rate（peak）** | | **Modulation type** |
| Category 1 | 1.2Mbps | | 16QAM,QPSK |
| Category 2 | 1.2Mbps | | 16QAM,QPSK |
| Category 3 | 1.8Mbps | | 16QAM,QPSK |
| Category 4 | 1.8Mbps | | 16QAM,QPSK |
| Category 5 | 3.6Mbps | | 16QAM,QPSK |
| Category 6 | 3.6Mbps | | 16QAM,QPSK |
| Category 7 | 7.2Mbps | | 16QAM,QPSK |
| Category 8 | 7.2Mbps | | 16QAM,QPSK |

| | | |
|---|---|---|
| Category 9 | 10.2Mbps | 16QAM,QPSK |
| Category 10 | 14.4Mbps | 16QAM,QPSK |
| Category 11 | 0.9Mbps | QPSK |
| Category 12 | 1.8Mbps | QPSK |
| Category 13 | 17.6Mbps | 64QAM |
| Category 14 | 21.1Mbps | 64QAM |
| Category 15 | 23.4Mbps | 16QAM |
| Category 16 | 28Mbps | 16QAM |
| Category 17 | 23.4Mbps | 64QAM |
| Category 18 | 28Mbps | 64QAM |
| Category 19 | 35.5Mbps | 64QAM |
| Category 20 | 42Mbps | 64QAM |
| Category 21 | 23.4Mbps | 16QAM |
| Category 22 | 28Mbps | 16QAM |
| Category 23 | 35.5Mbps | 64QAM |
| Category 24 | 42.2Mbps | 64QAM |
| **HSUPA device category** | **Max data rate（peak）** | **Modulation type** |
| Category 1 | 0.96Mbps | QPSK |
| Category 2 | 1.92Mbps | QPSK |
| Category 3 | 1.92Mbps | QPSK |
| Category 4 | 3.84Mbps | QPSK |
| Category 5 | 3.84Mbps | QPSK |
| Category 6 | 5.76Mbps | QPSK |
| **LTE-FDD device category (Downlink)** | **Max data rate（peak）** | **Modulation type** |
| Category 1 | 10Mbps | QPSK/16QAM/64QAM |
| Category 2 | 50Mbps | QPSK/16QAM/64QAM |
| Category 3 | 100Mbps | QPSK/16QAM/64QAM |
| Category 4 | 150Mbps | QPSK/16QAM/64QAM |
| **LTE-FDD device category (Uplink)** | **Max data rate（peak）** | **Modulation type** |
| Category 1 | 5Mbps | QPSK/16QAM |
| Category 2 | 25Mbps | QPSK/16QAM |
| Category 3 | 50Mbps | QPSK/16QAM |
| Category 4 | 50Mbps | QPSK/16QAM |

## C. Related Documents

**Table 42: Related Documents**

| NO. | Title | Description |
|---|---|---|
| [1] | SIM7500_SIM7600 Series_AT Command Manual_V1.xx | AT Command Manual |
| [2] | ITU-T Draft new recommendationV.25ter | Serial asynchronous automatic dialing and control |
| [3] | GSM 07.07 | Digital cellular telecommunications (Phase 2+); AT command set for GSM Mobile Equipment (ME) |
| [4] | GSM 07.10 | Support GSM 07.10 multiplexing protocol |
| [5] | GSM 07.05 | Digital cellular telecommunications (Phase 2+); Use of Data Terminal Equipment – Data Circuit terminating Equipment (DTE – DCE) interface for Short Message Service (SMS) and Cell Broadcast Service (CBS) |
| [6] | GSM 11.14 | Digital cellular telecommunications system (Phase 2+); Specification of the SIM Application Toolkit for the Subscriber Identity Module – Mobile Equipment (SIM – ME) interface |
| [7] | GSM 11.11 | Digital cellular telecommunications system (Phase 2+); Specification of the Subscriber Identity Module – Mobile Equipment (SIM – ME) interface |
| [8] | GSM 03.38 | Digital cellular telecommunications system (Phase 2+); Alphabets and language-specific information |
| [9] | GSM 11.10 | Digital cellular telecommunications system (Phase 2) ; Mobile Station (MS) conformance specification ; Part 1: Conformance specification |
| [10] | 3GPP TS 51.010-1 | Digital cellular telecommunications system (Release 5); Mobile Station (MS) conformance specification |
| [11] | 3GPP TS 34.124 | Electromagnetic Compatibility (EMC) for mobile terminals and ancillary equipment. |
| [12] | 3GPP TS 34.121 | Electromagnetic Compatibility (EMC) for mobile terminals and ancillary equipment. |
| [13] | 3GPP TS 34.123-1 | Technical Specification Group Radio Access Network; Terminal conformance specification; Radio transmission and reception (FDD) |
| [14] | 3GPP TS 34.123-3 | User Equipment (UE) conformance specification; Part 3: Abstract Test Suites. |
| [15] | EN 301 908-02 V2.2.1 | Electromagnetic compatibility and Radio spectrum Matters (ERM); Base Stations (BS) and User Equipment (UE) for IMT-2000. Third Generation cellular networks; Part 2: Harmonized EN for IMT-2000, CDMA Direct Spread (UTRA FDD) (UE) covering essential requirements of article 3.2 of the R&TTE Directive |
| [16] | EN 301 489-24 V1.2.1 | Electromagnetic compatibility and Radio Spectrum Matters (ERM); Electromagnetic Compatibility (EMC) standard for radio equipment and services; Part 24: Specific conditions for IMT-2000 CDMA Direct Spread (UTRA) for Mobile and portable (UE) radio and ancillary equipment |

| | | |
|---|---|---|
| [17] | IEC/EN60950-1(2001) | Safety of information technology equipment (2000) |
| [18] | 3GPP TS 51.010-1 | Digital cellular telecommunications system (Release 5); Mobile Station (MS) conformance specification |
| [19] | GCF-CC V3.23.1 | Global Certification Forum - Certification Criteria |
| [20] | 2002/95/EC | Directive of the European Parliament and of the Council of 27 January 2003 on the restriction of the use of certain hazardous substances in electrical and electronic equipment (RoHS) |
| [21] | Module secondary-SMT-UGD-V1.xx | Module secondary SMT Guidelines |
| [22] | SIM7X00 Series_UART_Application Note_V1.xx | This document describes how to use UART interface of SIMCom modules. |
| [23] | SIM7100_SIM7500_SIM7600 Series_USB AUDIO_Application Note_V1.xx | USB AUDIO Application Note |
| [24] | SIM7X00 Series_GPS_Application Note_V1.xx | GPS Application Note |
| [25] | Antenna design guidelines for diversity receiver system | Antenna design guidelines for diversity receiver system |
| [26] | SIM7100_SIM7500_SIM7600 _Sleep Mode_Application Note_V1.xx | Sleep Mode Application Note |

# D. Terms and Abbreviations

**Table 43: Terms and Abbreviations**

| Abbreviation | Description |
|---|---|
| ADC | Analog-to-Digital Converter |
| ARP | Antenna Reference Point |
| BER | Bit Error Rate |
| BTS | Base Transceiver Station |
| CS | Coding Scheme |
| CSD | Circuit Switched Data |
| CTS | Clear to Send |
| DAC | Digital-to-Analog Converter |
| DRX | Discontinuous Reception |
| DSP | Digital Signal Processor |
| DTE | Data Terminal Equipment (typically computer, terminal, printer) |
| DTR | Data Terminal Ready |
| DTX | Discontinuous Transmission |
| EFR | Enhanced Full Rate |
| EGSM | Enhanced GSM |
| EMC | Electromagnetic Compatibility |
| ESD | Electrostatic Discharge |
| ETS | European Telecommunication Standard |
| EVDO | Evolution Data Only |
| FCC | Federal Communications Commission (U.S.) |
| FD | SIM fix dialing phonebook |
| FDMA | Frequency Division Multiple Access |
| FR | Full Rate |
| GMSK | Gaussian Minimum Shift Keying |
| GNSS | Global Navigation Satellite System |
| GPRS | General Packet Radio Service |
| GPS | Global Positioning System |
| GSM | Global Standard for Mobile Communications |
| HR | Half Rate |
| HSPA | High Speed Packet Access |
| I2C | Inter-Integrated Circuit |
| IMEI | International Mobile Equipment Identity |
| LTE | Long Term Evolution |
| MO | Mobile Originated |
| MS | Mobile Station (GSM engine), also referred to as TE |
| MT | Mobile Terminated |
| NMEA | National Marine Electronics Association |
| PAP | Password Authentication Protocol |
| PBCCH | Packet Switched Broadcast Control Channel |
| PCB | Printed Circuit Board |
| PCS | Personal Communication System, also referred to as GSM 1900 |
| RF | Radio Frequency |
| RMS | Root Mean Square (value) |

| | |
|---|---|
| RTC | Real Time Clock |
| SIM | Subscriber Identification Module |
| SMS | Short Message Service |
| SPI | serial peripheral interface |
| SMPS | Switched-mode power supply |
| TDMA | Time Division Multiple Access |
| TE | Terminal Equipment, also referred to as DTE |
| TX | Transmit Direction |
| UART | Universal Asynchronous Receiver & Transmitter |
| VSWR | Voltage Standing Wave Ratio |
| SM | SIM phonebook |
| NC | Not connect |
| EDGE | Enhanced data rates for GSM evolution |
| HSDPA | High Speed Downlink Packet Access |
| HSUPA | High Speed Uplink Packet Access |
| ZIF | Zero intermediate frequency |
| WCDMA | Wideband Code Division Multiple Access |
| VCTCXO | Voltage control temperature-compensated crystal oscillator |
| USIM | Universal subscriber identity module |
| UMTS | Universal mobile telecommunications system |
| UART | Universal asynchronous receiver transmitter |

## E. Safety Caution

**Table 44: Safety Caution**

| Marks | Requirements |
|---|---|
| | When in a hospital or other health care facility, observe the restrictions about the use of mobiles. Switch the cellular terminal or mobile off, medical equipment may be sensitive and not operate normally due to RF energy interference. |
| | Switch off the cellular terminal or mobile before boarding an aircraft. Make sure it is switched off. The operation of wireless appliances in an aircraft is forbidden to prevent interference with communication systems. Forgetting to think much of these instructions may impact the flight safety, or offend local legal action, or both. |
| | Do not operate the cellular terminal or mobile in the presence of flammable gases or fumes. Switch off the cellular terminal when you are near petrol stations, fuel depots, chemical plants or where blasting operations are in progress. Operation of any electrical equipment in potentially explosive atmospheres can constitute a safety hazard. |
| | Your cellular terminal or mobile receives and transmits radio frequency energy while switched on. RF interference can occur if it is used close to TV sets, radios, computers or other electric equipment. |
| | Road safety comes first! Do not use a hand-held cellular terminal or mobile when driving a vehicle, unless it is securely mounted in a holder for hands free operation. Before making a call with a hand-held terminal or mobile, park the vehicle. |
| | GSM cellular terminals or mobiles operate over radio frequency signals and cellular networks and cannot be guaranteed to connect in all conditions, especially with a mobile fee or an invalid SIM card. While you are in this condition and need emergent help, please remember to use emergency calls. In order to make or receive calls, the cellular terminal or mobile must be switched on and in a service area with adequate cellular signal strength.<br>Some networks do not allow for emergency call if certain network services or phone features are in use (e.g. lock functions, fixed dialing etc.). You may have to deactivate those features before you can make an emergency call.<br>Also, some networks require that a valid SIM card be properly inserted in the cellular terminal or mobile. |

## Contact us:

**Shanghai SIMCom Wireless Solutions Ltd.**

Add: SIM Technology Building, No.633, Jinzhong Road, Changning District, Shanghai P.R. China 200335

Tel：+86 21 3235 3300

Fax：+86 21 3235 3020

URL：www.simcomm2m.com