EC No.	EC Description	DR.
1	/	/

1.6

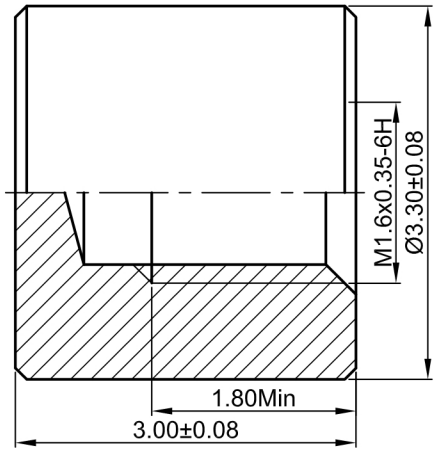

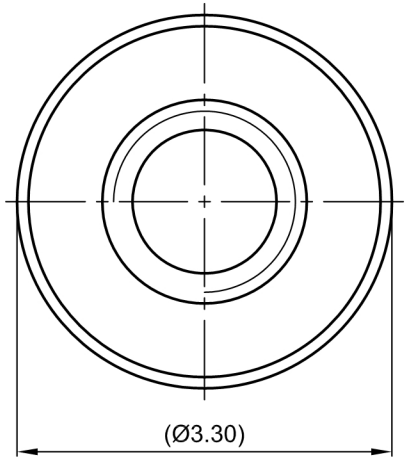

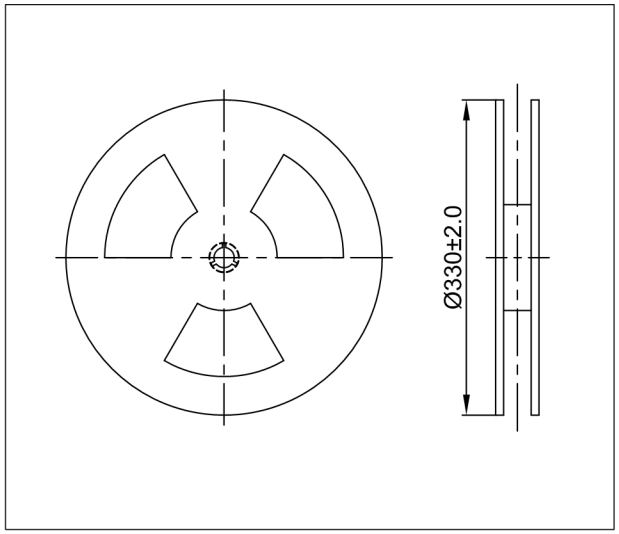

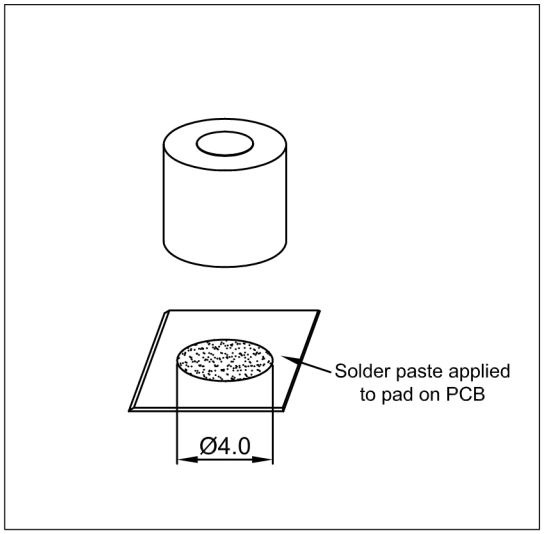

NOTES:
1.Material:Steel 1215;
2.Surface Treatment: Tin Plated;
3.Remove all bur and sharpe angle ,product is clean;
4.Packaged on 13" recyclable reels, Tape width is 16mm ,
Reels conform to IEC 60286-3:2007 Package:1800 pcs/Reel;
5.RoHS Compliant.

In-saiL®
力帆精密&力本五金

UNIT: mm

DIM Tol.:	Angle Tol.:
X. ±	X°. ±
.X ±	.X° ±
.XX ±	.XX° ±
.XXX±	.XXX°±

①	1	/	/	See Note 1	See Note 3	/
Part Item	QTY.	Name	Description	Material	Surface Treatment	Remark
DR. LEX 2014.02.03		CHKD. .	APPD. .	Unit net weight ≈ / g		Rough weight ≈ / g

Shenzhen In-saiL Precision Parts Co.,Ltd
The Drawing and Specification are the Property of Shenzhen In-saiL Precision Parts Co.,Ltd. Without the Prior Written Permission of Top Management, any person or party except the intended ones is prohibited to Copy, Reproduce, Duplicate this document, Please send email to **sales@in-sail.com** if you have any request.

TITLE: PE24-M1.6x3.0-OD3.3SDT

Drawing#:	P/N:	REV.	Sheet
LFPE2432R00	/	A	1 of 1