MD60DU-M7

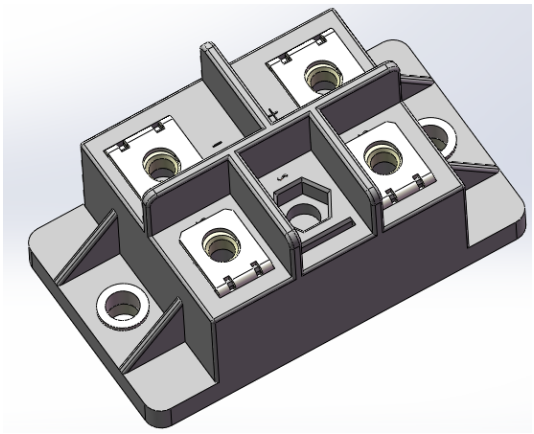

Glass Passivated Rectifier Diode Modules

V_{RRM} 800 to 1800V
I_D 60A

Applications

- Non-controllable rectifiers for AC/AC converters
- Line rectifiers for transistorized AC motor controllers
- Field supply for DC motors

Features

- Blocking voltage:800 to 1800V
- Heat transfer through aluminum oxide DBC ceramic isolated metal baseplate
- Glass passivated chip

Circuit

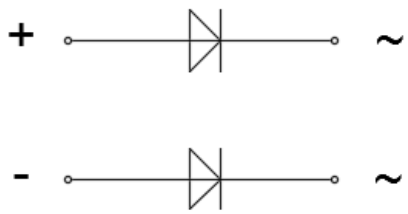

Module Type

TYPE	V_{RRM}	V_{RSM}
MD60DU08M7	800V	900V
MD60DU12M7	1200V	1300V
MD60DU16M7	1600V	1700V
MD60DU18M7	1800V	1900V

Maximum Ratings

Symbol	Conditions	Values	Units
I_D	Single phase ,half wave 180° conduction Tc=100℃	60	A
I_{FSM}	t=10mS Tvj =45℃	1150	A
i^2t	t=10mS Tvj =45℃	6600	A^2s
V_{isol}	a.c.50HZ;r.m.s.;1min	3000	V
T_{vj}		-40 to +150	℃
T_{stg}		-40 to +125	℃
Mt	To terminals(M5)	3±15%	Nm
Ms	To heatsink(M5)	5±15%	Nm
Weight	Module (Approximately)	130	g

Thermal Characteristics

Symbol	Conditions	Values	Units
Rth(j-c)	Per diode	1.1	℃/W
Rth(c-s)	Module (Approximately)	0.07	℃/W

Electrical Characteristics

Symbol	Conditions	Values			Units
		Min.	Typ.	Max.	
V_{FM}	T=25℃ I_F =60A		0.95	1.05	V
	T=25℃ I_F =200A	—	1.3	1.45	V
I_{RD}	T_{vj}=25℃ V_{RD}=V_{RRM} T_{vj}=150℃ V_{RD}=V_{RRM}	—	—	0.03 5	mA mA

Performance Curves

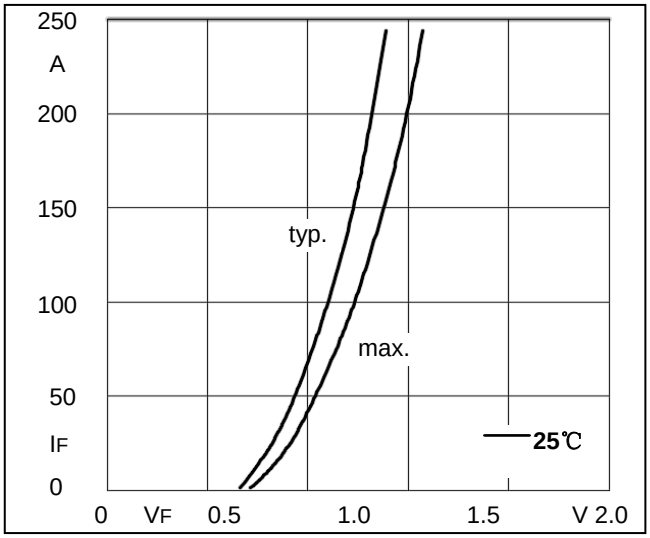

Fig1. Forward Characteristics

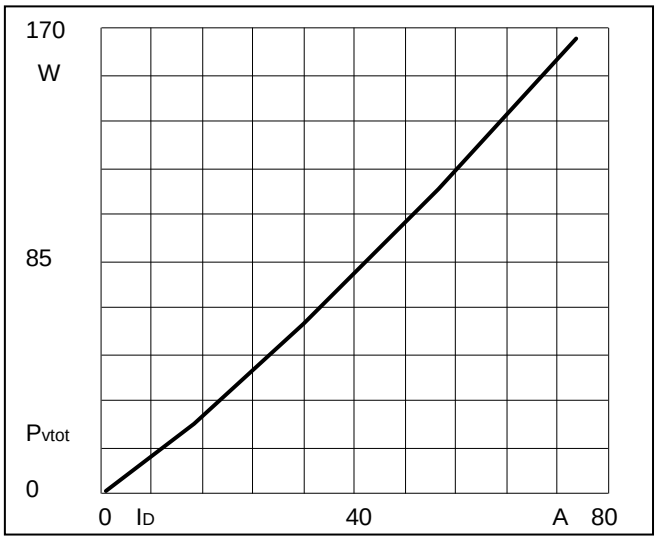

Fig2. Power dissipation

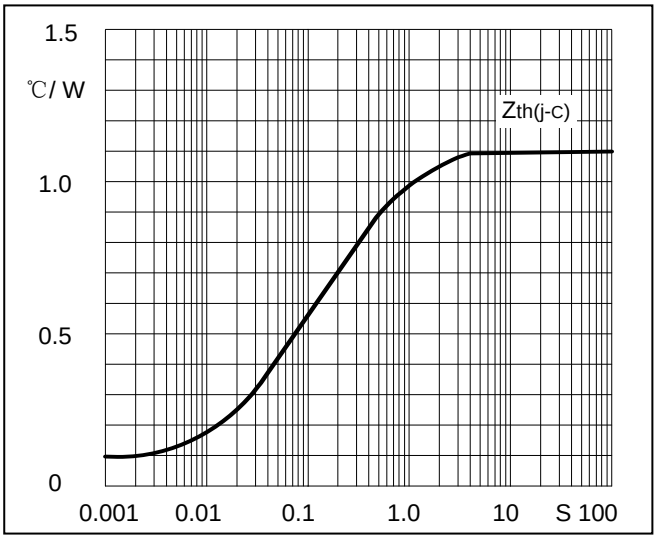

Fig3. Transient thermal impedance

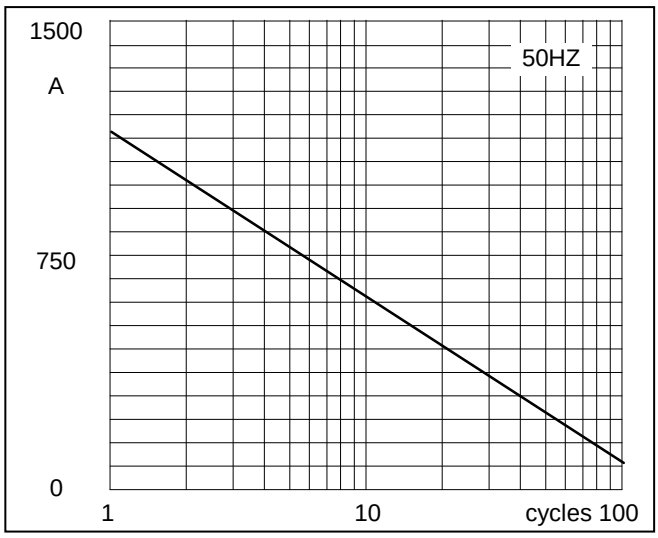

Fig4. Max Non-Repetitive Forward Surge Current

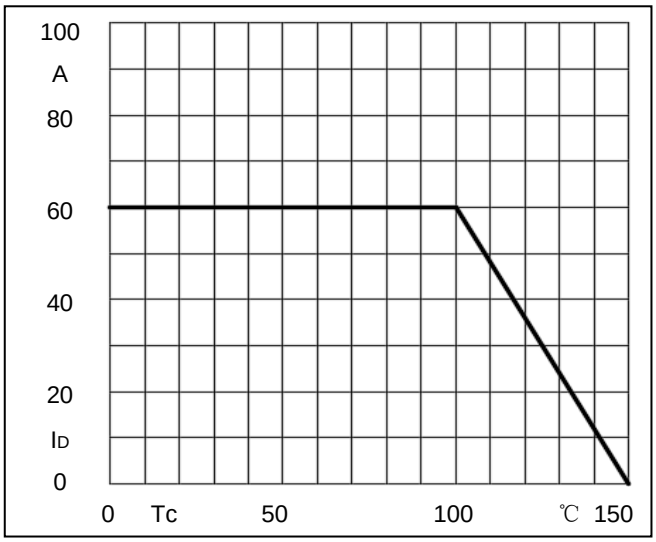

Fig5.Forward Current Derating Curve

Package Outline Information

CASE：M7

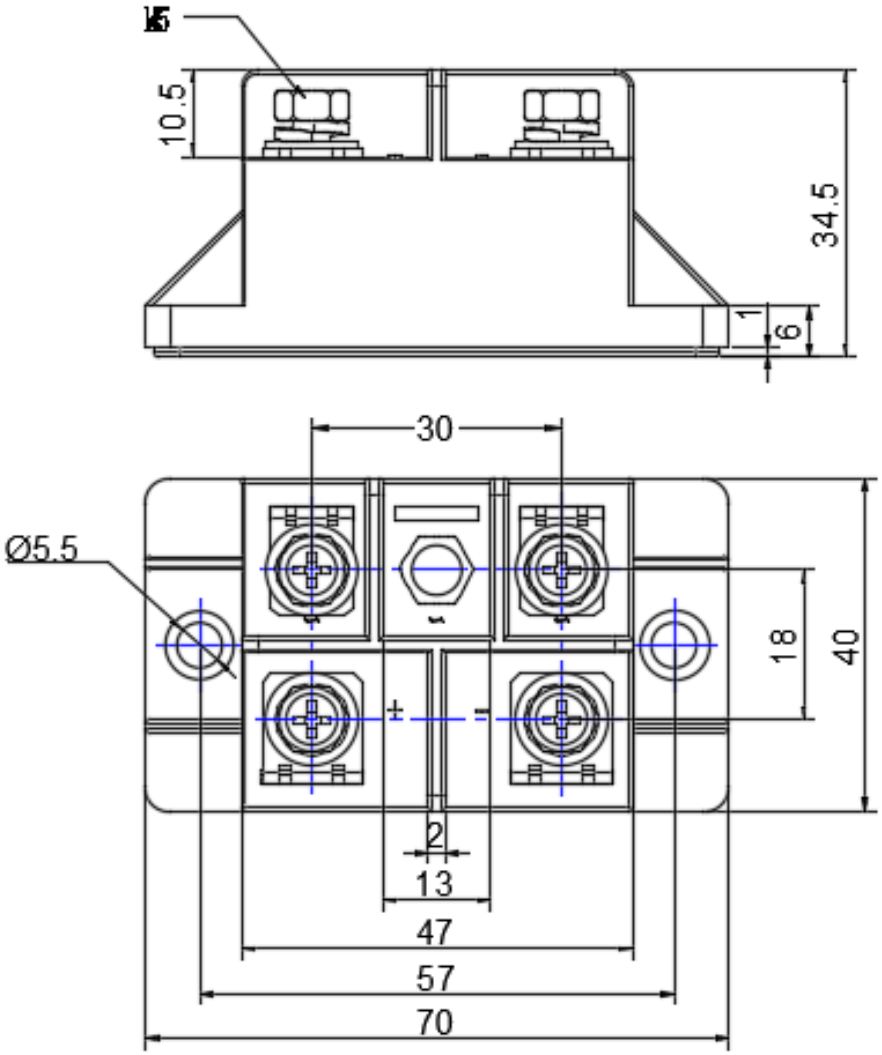

Dimensions in mm