REOMAX ELECTRONICS TECHNOLOGY Co.,LTD

承　认　书

SPECIFICATION FOR APPROVAL

客户名称
Customer name

客户料号
Customer material No.

产品名称
Product name　　贴片保险丝（6125.2410.1808）

产品型号
Product model

送样日期
Deliver date　　年　　月　　日

本司确认（TRX APPROVAL）			
检验 Inspection	校对 Proofreading	批准 Approval	签章 Signature
唐军	唐盛华	罗雄	
客户确认（CUSTOMER APPROVAL）			
检验 Inspection	校对 Proofreading	批准 Approval	签章 Signature

确认结果Verify the results：

☐合格Qualified　☐不合格Unqualified　☐其他Other

规格承认书

Specification for approval



表面贴装保险丝 250V

产品名称：SEF 系列 2410/6125/1808 快断型

Product Type: SEF Series 2410/6125/1808 ***Fast-Acting***

Surface Mount Fuse 250V

Dongguan Reomax Electronics Technology Co., Ltd

电话: +86-769-88030405 传真: +86-769-85635648

厂址: 广东省东莞市大岭山镇大塘村地塘岭工业园

网址: http://www.reomaxfuse.com http://www.reomax-china.com

Reomax Electronics (HK) Limited

Add: 5th Floor, Bright way tower, No.33 Mong kok road, Kowloon Hong Kong.

Web: http://www.reomaxfuse.net

© 2020 REOMAX® ELECTRONICS TECHNOLOGY CO., LTD.
Specifications are subject to change without notice
Revised: 2020TEL.13798531548

1. 产品特性及应用范围 / Description, Features and Applications

本产品适用于各类电子设备电路初、次级电路板的过流保护，广泛应用于固态照明、电池充电、消费电子、电子镇流器、LED AC/DC 电源供应、网络通信、医疗仪器及工业控制器等领域。

Descriptions：

REOMAX 6125 series Fast-Acting square Surface Mount fuses are ceramic tube/end cap constructions, RoHS compliant, Halogen Free and lead(Pb) exempts of the requirements of RoHS Directive(2002/95/EC), with U.S. (UL/CSA) safety agency approvals. Provide board level primary and secondary circuit protection in a wide variety of applications. With excellent inrush current withstanding capability, excellent reliability for thermal and mechanic shock, also have a high reliability and stable solder ability, end caps are available in gold/silver/n*ickel plated.*

Features：

- *Fast-Acting (Fast-Acting)*
- *Small size(6.1mm*2.5mm)*
- *Wide range of current rating available*
- *Wide operating temperature range*
- *Low temperature de-rating*
- *RoHS compliant*
- *Tape and Reel for automatic placement*
- *Conflict free metals*

Applications：

- LED lighting
- Notebook PC
- Battery devices
- LCD/PDP devices
- LCD backlight inverter
- Portable Devices
- Power supply
- Networking devices
- PC server
- Cooling fan system
- Storage system
- Telecom system
- Wireless base station
- White goods
- Game console
- Office equipment
- Digital camera
- Industrial equipment
- Medical equipment
- Automotive devices

2. 安规认证标准及编号 / Standards and Agency Approvals

2.1 执行标准：遵循 UL 248-14。

Standards：In accordance with UL 248-14.

2.2 认证范围 Certification：

安规标准 Agency	认证范围 Ampere Range	证书编号 Agency File Number
UL	50mA ~ 7A	E340427(JDYX2)
cUL	50mA ~ 7A	E340427(JDYX8)

© 2020 REOMAX® ELECTRONICS TECHNOLOGY CO., LTD.
Specifications are subject to change without notice

2.3 目录编号 Catalogue No.，● 已认证 Approved / ○ 认证中 Pending

目录编号 Catalog No.	额定电流 Ampere Rating	额定电压 Voltage Rating	分断能力 Breaking Capacity	冷阻值 Nominal Cold Resistance (Ohms)	熔化热能 I^2TMelting Integral(A^2.S)	安规认证 Agency Approvals	
						UL	cUL
SEF0050	50mA	250VAC/DC	50A@300VAC 50A@250VAC 200A@125VAC	6.9	0.00025	●	●
SEF0063	63mA			5.0	0.00035	●	●
SEF0080	80mA			4.5	0.00040	●	●
SFE0100	100mA			4.2	0.00043	●	●
SEF0125	125mA			3.9	0.00045	●	●
SEF0160	160mA			2.308	0.056	●	●
SEF0200	200mA			1.655	0.060	●	●
SEF0250	250mA			1.456	0.063	●	●
SEF0300	300mA			0.855	0.190	●	●
SEF0315	315mA			0.656	0.200	●	●
SEF0375	375mA			0.605	0.328	●	●
SEF0400	400mA			0.580	0.335	●	●
SEF0500	500mA			0.302	0.471	●	●
SEF0600	600mA			0.268	0.771	●	●
SEF0630	630mA			0.259	0.982	●	●
SEF0700	700mA			0.233	2.102	●	●
SEF0750	750mA			0.227	2.230	●	●
SEF0800	800mA			0.205	2.375	●	●
SEF1100	1A			0.129	3.685	●	●
SEF1125	1.25A			0.095	3.755	●	●
SEF1150	1.5A			0.089	6.751	●	●
SEF1160	1.6A			0.078	6.800	●	●
SEF1200	2A			0.039	12.140	●	●
SEF1250	2.5A			0.036	16.005	●	●
SEF1300	3A			0.028	21.550	●	●
SEF1315	3.15A			0.027	25.740	●	●
SEF1350	3.5A			0.026	30.041	●	●
SEF1400	4A			0.020	43.201	●	●
SEF1500	5A			0.015	55.240	●	●

© 2020 REOMAX® ELECTRONICS TECHNOLOGY CO., LTD.
Specifications are subject to change without notice

SEF1600	6A			0.013	75.205	●	●
SEF1630	6.3A			0.011	93.540	●	●
SEF1700	7A			0.010	97.100	●	●

- *: These catalog no. cold resistance and I2t value are pending due to fuse elements shall be customized;
- DC Cold Resistance are measured at <10% of rated current in ambient temperature of 25℃;
- Typical Pre-arching I2t are calculated at 10*In Current or 8ms;
- Min Interrupting Rating: 1.35*In.

3. 产品标示 / Product Marking

保险丝上需有下列标示 / The fuses shall have the following markings

示例 Example:

	1A
①	②

①	制造厂商标识/REOMAX Trade Mark:
②	额定电流/Rated Current (A): ___**A** 或 or___**mA**

注:对于标示的大小和位置没有规定 / Note: Size and position of the markings shall not be provided.

4. 结构及尺寸 / Dimensions and Structure

单位：毫米 / Unit: mm

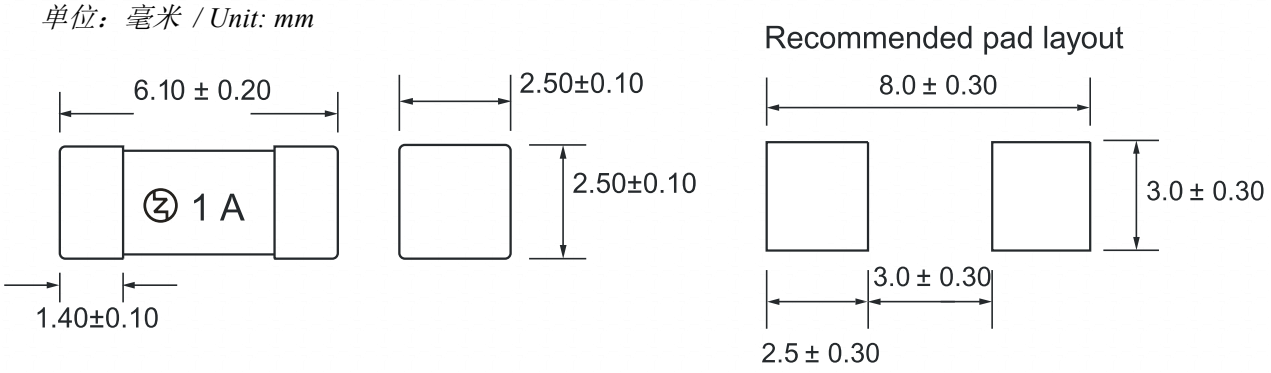

5. 材料明细 / Material Details

编 号 NO.	零 件 名 称 Part Name	材 质 Material
①	端帽 End caps	黄铜镀金 Gold Plated Brass Cap
②	主体 Body	陶瓷管 Non-Transparent Square Ceramic Tube
③	熔丝 Fuse element	合金 Cu-Ag Alloy wire

© 2020 REOMAX® ELECTRONICS TECHNOLOGY CO., LTD.
Specifications are subject to change without notice
Revised: 2020TEL.13798531548

6. 产品特性 / Product Characteristics

编号 NO.	项目 Item	内容 Content	参考标准 Reference standards
1	产品标识 Product Marking	Brand, Ampere Rating	REOMAX marking standards
2	工作温度 Operating Temperature	-55°C to 125°C	IEC60068-2-1/2
3	可焊性 Solderability	T=240°C±5°C , t=3sec±0.5sec, Coverage≥95%	MIL-STD-202, Method 208
4	耐焊接热 Resistance to Soldering Heat	10 sec at 260°C	MIL-STD-202, Method 210, Test condition B
5	绝缘阻抗 Insulation Resistance (after Opening)	10,000 ohms minimum	MIL-STD-202, Method 302, Test Condition A
6	热冲击 Thermal Shock	5 cycles, -65°C / +125°C, 15 minutes at each extreme	MIL-STD-202, Method 107, Test Condition B
7	机械冲击 Mechanical Shock	100G's peak for 6 milliseconds, 3cycles	MIL-STD-202, Method 213, Test I
8	振动试验 Vibration	0.03"amplitude, 10-55 Hz in 1 min. 2hrs each XYZ=6hrs	MIL-STD-202, Method 201
9	耐湿性 Moisture Resistance	10 cycles	MIL-STD-202, Method 106
10	盐雾试验 Salt Spray	5% salt solution, 48hrs	MIL-STD-202, Method 101, Test Condition B

7. 电气特性 / Electrical Characteristics

7.1 实验条件：Test Condition

所有测试环境温度为 25±5℃。

All electrical test is to be conducted with the ambient air at a temperature of 25±5℃.

7.2 分断能力 Interrupting Rating：

保险丝承受分断能力：50A@250Vac，200A@125Vac.

Breaking Capacity: 50A@250Vac，200A@125Vac.

7.3 熔断时限 / Operating Characteristics

© 2020 REOMAX® ELECTRONICS TECHNOLOGY CO., LTD.
Specifications are subject to change without notice
Revised: 2020TEL.13798531548

额定电流的% % of Ampere Rating(In)	熔断时间 Blowing Time
100% * In	大于 4 小时(4 hours Min)
200% * In	小于 120 秒 (120 sec Max)

7.4 平均时间电流曲线图 / Average Time Current Curves

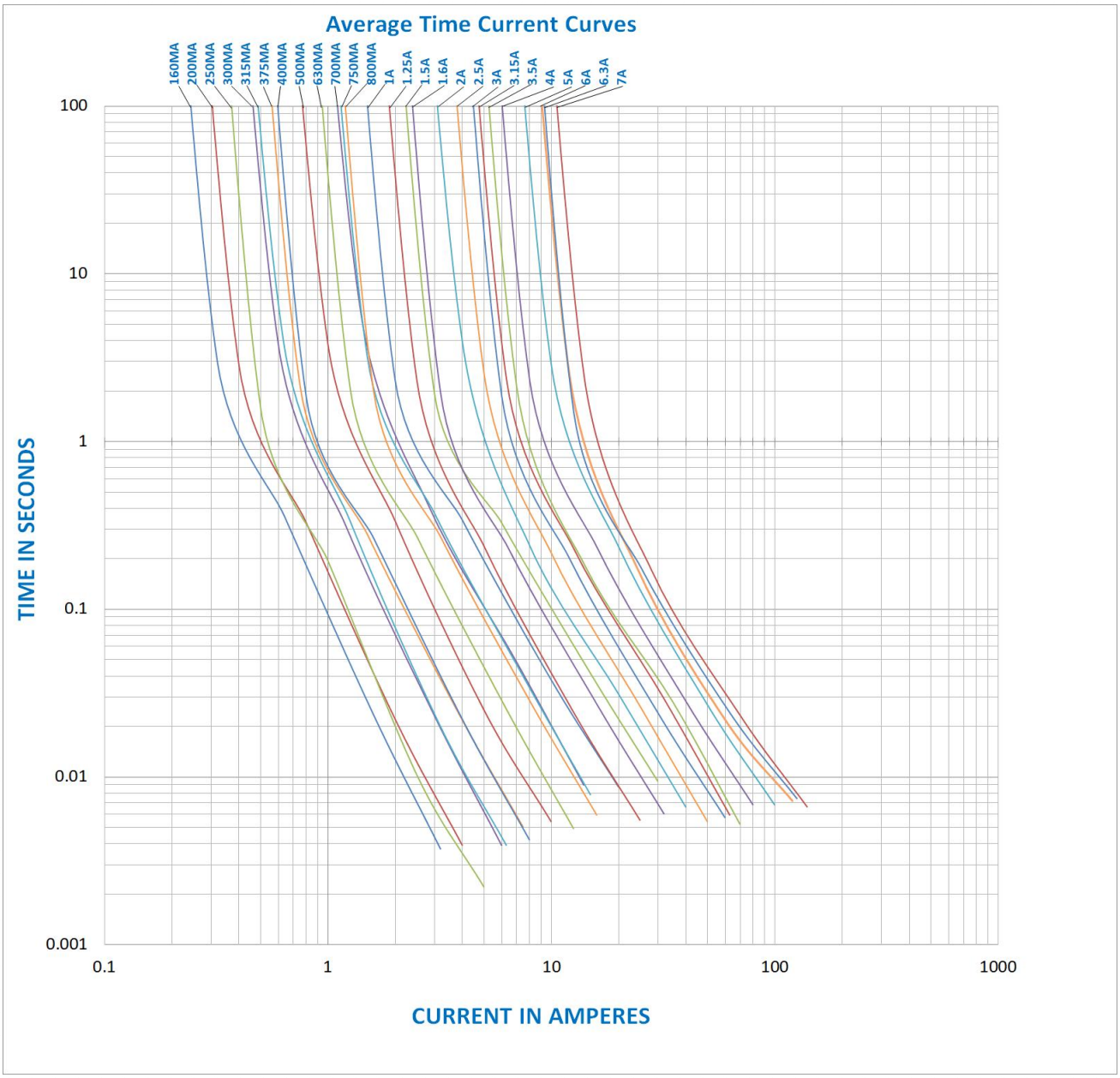

8. 环境特性 / Environmental Characteristic

© 2020 REOMAX® ELECTRONICS TECHNOLOGY CO., LTD.
Specifications are subject to change without notice
Revised: 2020TEL.13798531548

若操作环境温度超出 25±5℃范围，在选用保险丝规格时，需考虑操作环境温度对保险丝的影响，请参照如下：温度-电流曲线图。

When choosing the fuse's specification, if the operating environmental temperature beyond the scope from 20~30℃, engineer should consider the environmental temperature's affection to fuses.

Please refer: Temperature Rerating Curve:

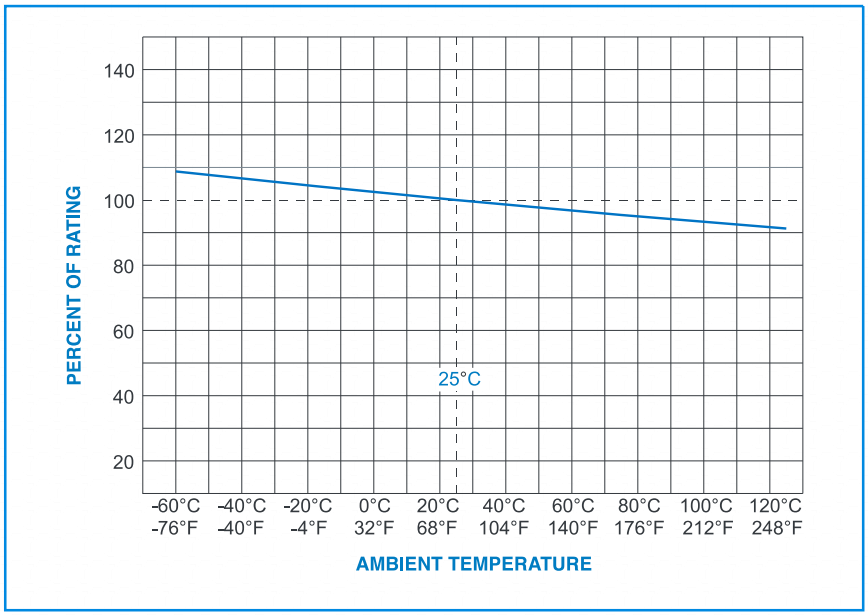

9. 建议焊接参数 / Recommended Soldering Parameters

A. 波峰/回流焊参数 / Wave /Reflow Soldering Parameters:

锡膏工艺 / Solder paste process.

锡炉温度 / Solder Pot Temperature: 260°C Max

焊接时间 / Solder Dwell Time: 5 seconds max

Reflow Condition		Pb-Free assembly
Average ramp-up rate (Ts(max)to Tp)		5°C /second max.
Preheat	Temperature Min (Ts(min))	150°C
	Temperature Max (Ts(max))	200°C
	Time (Min to Max) (ts)	60-120 seconds
Reflow	Temperature (T_L)	220°C
	Time Max (t_L)	60 seconds
Peak Temperature(Tp)		260°C max
Ramp-down Rate		5°C/second max
Time 25°C to peak Temperature (Tp)		8 minutes max

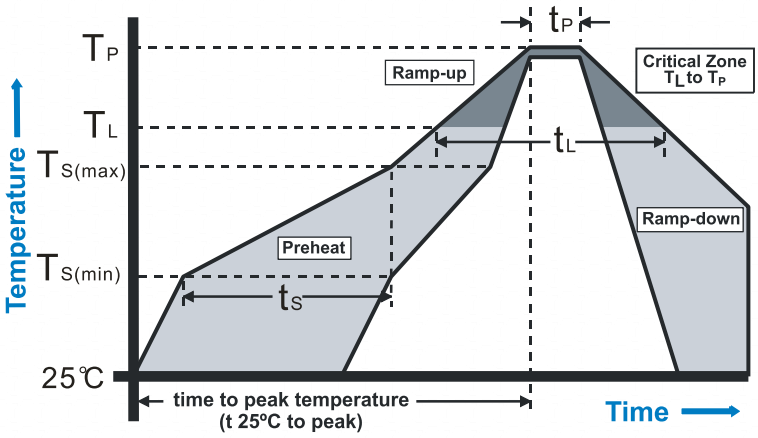

© 2020 REOMAX® ELECTRONICS TECHNOLOGY CO., LTD.
Specifications are subject to change without notice
Revised: 2020TEL.13798531548

B．手工焊参数 / Hand-Solder Parameters:

烙铁温度 / Solder Iron Temperature: 300±5℃

焊接时间 / Heating Time: 1~2 s Max

10. 包装 / Packaging

1000 个每卷/ 1,000 pcs in 7 inches dia. reel, 12mm wide tape, EIA Standard 481

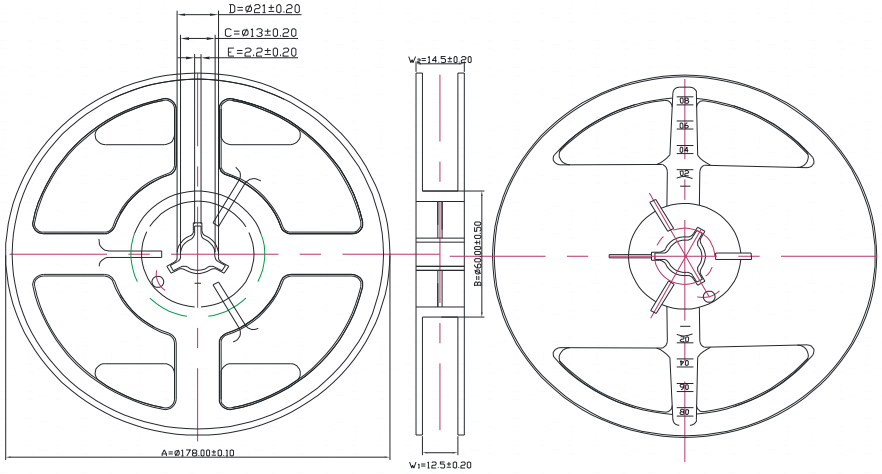

Item	A	B	C	D	E	W1	W2
Spec.(mm)	178±0.10	60±0.50	13±0.20	21±0.20	2.2±0.20	12.5±0.20	14.5±0.20

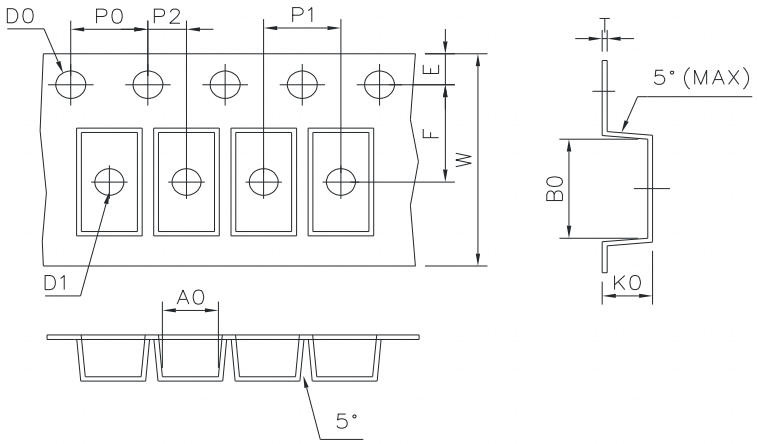

Item	A_0	B_0	D_0	D_1	E	F
Spec.(mm)	2.70±0.10	6.40±0.10	1.50+0.10	1.50+0.25	1.75±0.10	5.50±0.10
Item	K_0	P_0	P_1	P_2	W	t
Spec.(mm)	2.70±0.10	4.00±0.10	4.00±0.10	2.00±0.10	12.00±0.15	0.25±0.05

11. 其他 / Others

© 2020 REOMAX® ELECTRONICS TECHNOLOGY CO., LTD.
Specifications are subject to change without notice
Revised: 2020TEL.13798531548

11.1 如果在使用中有超出本规格书的要求，须经双方协商确认。

In the event that an impropriety is found beyond this specification, it shall be fixed by mutual agreement between the parties.

附件 I: 安规证书 / Appendix I: Safety approval certificates

© 2020 REOMAX® ELECTRONICS TECHNOLOGY CO., LTD.
Specifications are subject to change without notice
Revised: 2020TEL.13798531548