Nizn Common Mode Power Line Chokes - CTRN1409

Meisongbei



Features

- Core material: Nickel-Zinc Ferrite
- Low cost
- Dielectric strength: 1500 Vrms
- Fixed pin spacing allow easy PCB insertion
- Operating temperature: -45 to +125°C
- Custom Designs Available

Application

- Power electronics
- Power line in- and output filter
- Optimized for burst signals

Dimensions & Configurations (Unit:mm)

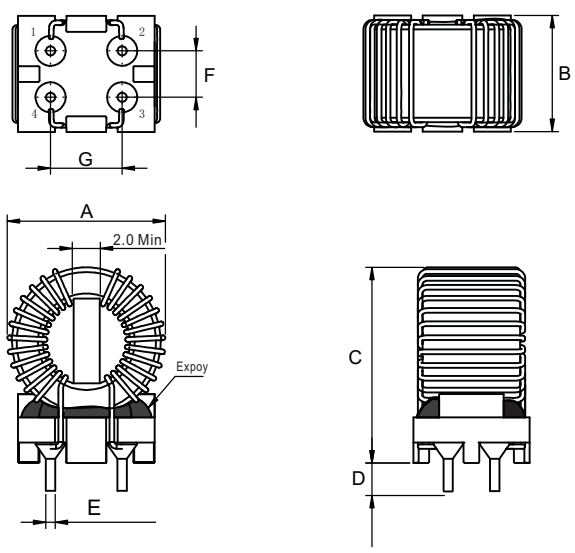

Schematic

Type	A	B	C	D	E	F	G
CTRN1409	18.5 Max.	14.5 Max.	22.0 Max.	3.5±0.5	0.7 Ref	5.0±0.5	7.7±0.5

Electrical Characteristics For CTRN1409 Series

Part Number	Inductance [uH] (±30%)	Rated Current (max) [A]	DCR(max) [mΩ]
CTRN1409-160N	16	7.5	5.5
CTRN1409-320N	32	5.5	11.0
CTRN1409-420N	42	6.5	8.9
CTRN1409-650N	65	5.0	14.3
CTRN1409-111N	110	3.0	34.1

- Inductance tested at 100kHz 20°C
- Idc: Current to cause 70°C temperature rise.
- Hi-pot: 1500VAC/ 50Hz/ 5mA/ 2sec.
- Rated voltage: 250VAC (50/60Hz)