MATERIALS AND FINISHES:

SMA JACK CONNECTOR:

SEE SD-73251-392

MICRO COAX CONNECTOR (MCRF):

SHELL: PHOSPHOR BRONZE
PLATED GOLD

HOUSING: PBT

CONTACT: PHOSPHOR BRONZE
PLATED GOLD

CABLE: 1.13MM CABLE
COLOR: BLACK

FREQUENCY RANGE: DC-3GHz

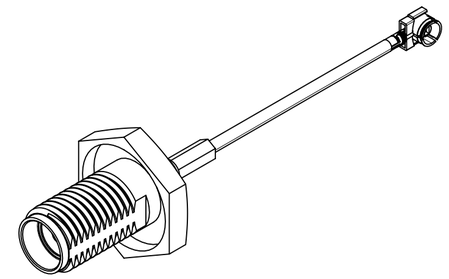

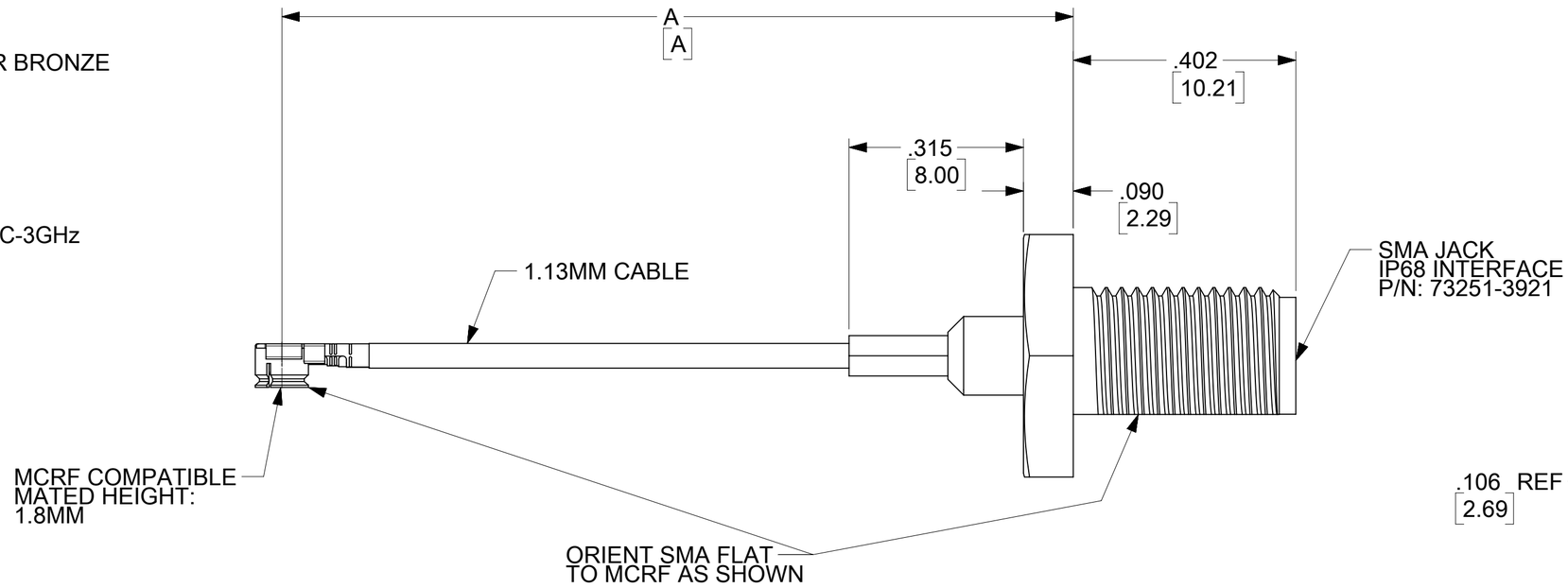

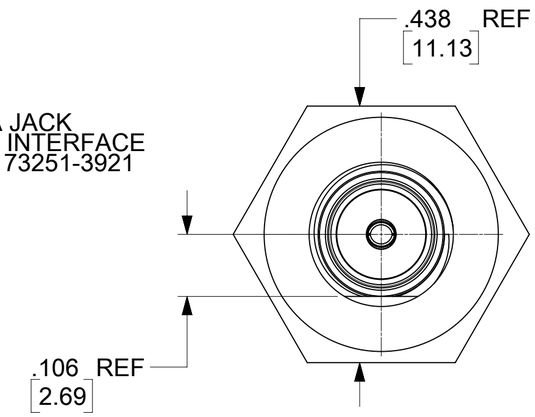

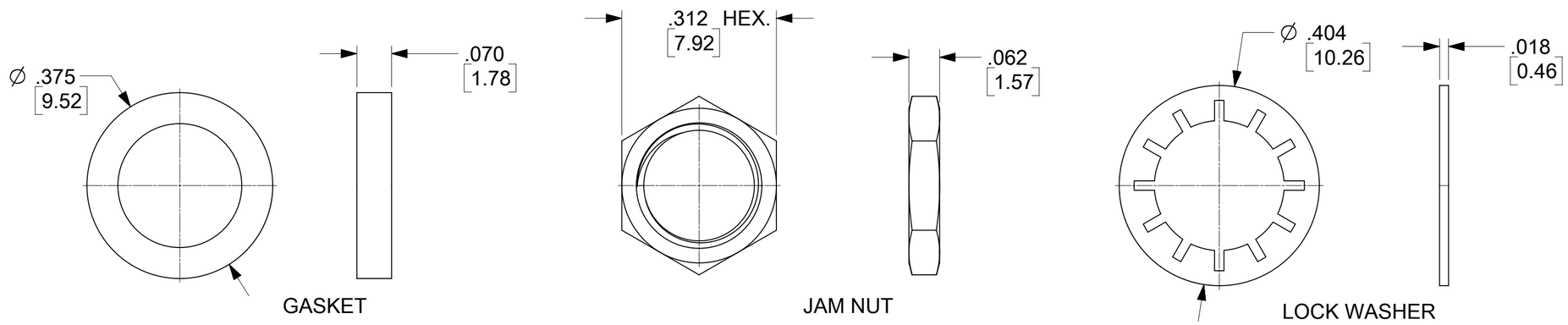

89762-2712	9.055±.315	230.00±8.00
89762-2711	3.150±.118	80.00±3.00
89762-2710	1.961±.059	49.80±1.50
PART NO.	INCH	MM
DIM (X)	DIM A	

THIS DRAWING CONTAINS INFORMATION THAT IS PROPRIETARY TO MOLEX ELECTRONIC TECHNOLOGIES, LLC AND SHOULD NOT BE USED WITHOUT WRITTEN PERMISSION

SYMBOLS: FA = 0; FC = 0; FP = 0; S = 0; ▼ = 0; C = 0; ☒ = 0; ■ = 0; V = 0

DIMENSION UNITS: IN/MM
SCALE: NTS

GENERAL TOLERANCES (UNLESS SPECIFIED)
ANGULAR TOL ± 2.0 °
4 PLACES ±
3 PLACES ±
2 PLACES ±
1 PLACE ±
0 PLACES ±

DRAFT WHERE APPLICABLE MUST REMAIN WITHIN DIMENSIONS

CURRENT REV DESC:
UPDATE DIM TO A FROM 1.429

EC NO: 654655
DRWN: JSU18 2021/02/04
CHK'D: YCHENG 2021/02/04
APPR: YCHENG 2021/02/04

INITIAL REVISION:
DRWN: JWIENER 2013/10/18
APPR: JWIENER 2013/11/15

THIRD ANGLE PROJECTION
DRAWING: C-SIZE
SERIES: 89762

molex

CA SMA JACK BLKHD IP68
TO MCRF 1.13 MM CABLE 50 OHM CA-SMA/MCRF
EWR-5257

PRODUCT CUSTOMER DRAWING

DOCUMENT NUMBER	DOC TYPE	DOC PART	REVISION
SD-89762-271	PSD	001	A3

MATERIAL NUMBER	CUSTOMER	SHEET NUMBER
SEE TABLE	GENERAL MARKET	1 OF 1

DOCUMENT STATUS	P1	RELEASE DATE	2021/02/04 09:05:39

FORMAT: master-tb-prod-C
REVISION: H
DATE: 2018/01/18